Od problemu Steinmetz'a do Składowych Fizycznych Prądów (CPC): historia rozwoju teorii mocy

Leszek S. Czarnecki, IEEE Life Fellow
Titled Professor of Technological Sciences of Poland
Distinguished Professor at School of Electrical Engineering
Louisiana State University, USA

Internet Page: www.lsczar.info

Cost of the electric energy production and delivery is related to a main degree to the apparent power *S.*
At the supply source terminals.

It is a product
of RMS values of the supply voltage *U* and the load current *I*

$$S = U \times I$$

For customers a worth has however only
the energy delivered

$$W = \int_0^{\tau} P\,dt$$

The inequality

$$S > P$$

is of the major importance for electrical systems economy

By the end of XIX century
it was concluded
that

$$S^2 - P^2 = Q^2$$

where Q denotes the reactive power of the load

Steinmetz Experiment: 1892

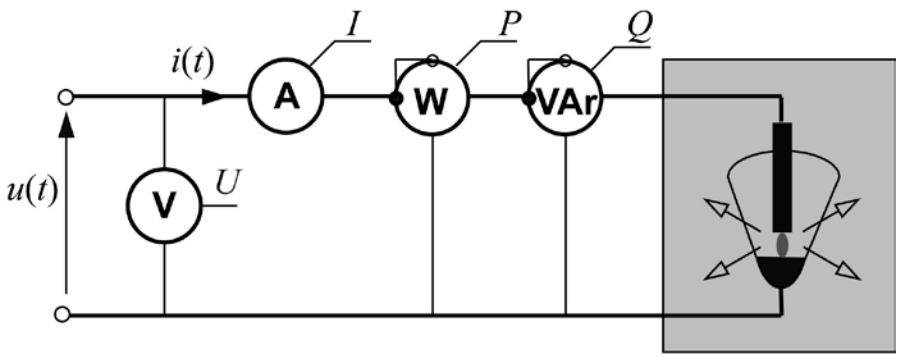

$$P^2 + Q^2 < S^2, \qquad Q = 0$$

Why the apparent power *S* is higher than the active power *P* ?

How the difference between *S* and *P* can be reduced ?

Why the apparent power *S* is higher
than the active power *P* ?

How the difference between *S* and *P*
can be reduced ?

These apparently simle questions
have occurred
to be ones of the most difficult questions of electrical engineering
for the whole XX century.

Hundreds of scientists were involved
in the quest for the answer.
Hundreds of papers have been published.

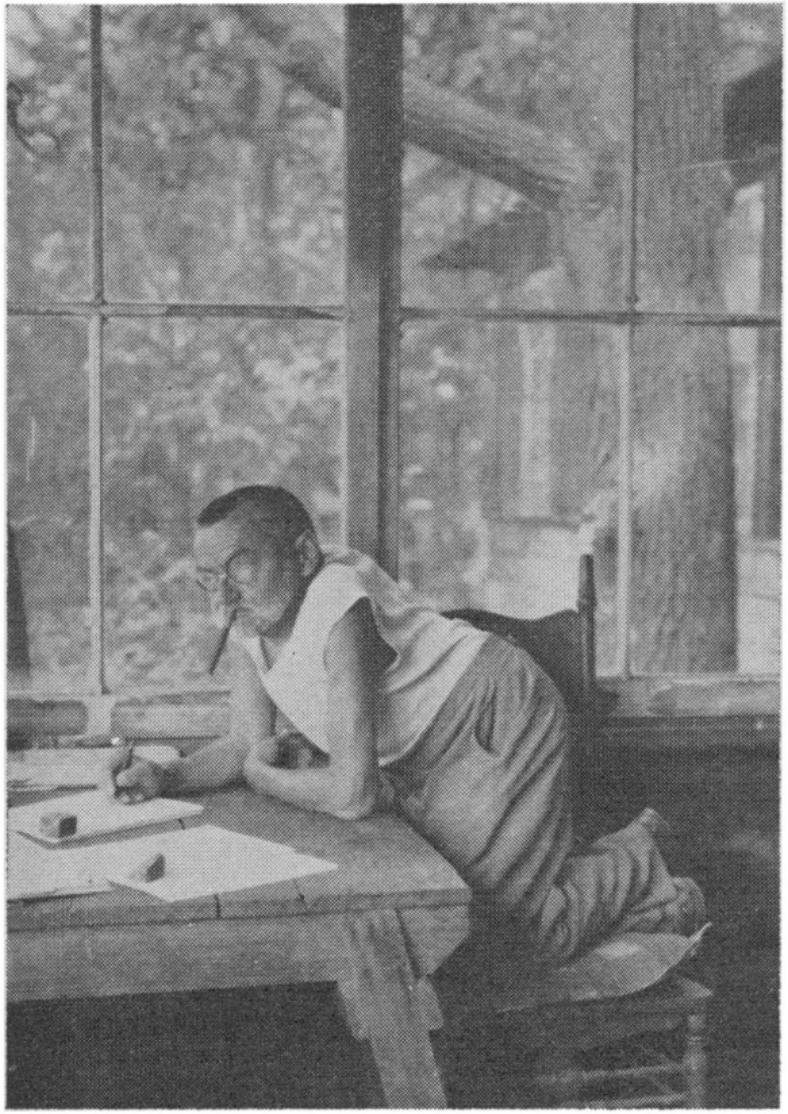

Charles Proteus Steinmetz

Einstein and Steinmetz.

In Einstain's company…

Present day “Steinmetz Experiment”
with line currents up to

625 kA

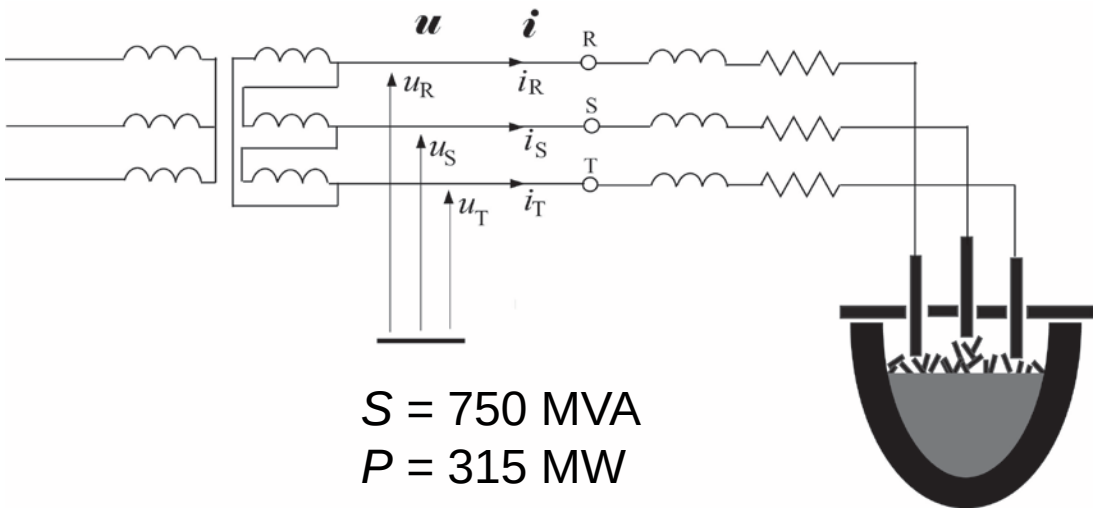

S = 750 MVA
P = 315 MW

Current not only distorted, but also asymmetrical and random
Power factor: $\lambda \sim 0.42$

Annual bill for energy
~ 500 Million $

Major disscussion forums**:**

International Workshop on Reactive Power Definition and Measurements in Nonsinusoidal Systems,
Bi-annual meetings in Italy,
Chaired by A. Ferrero

International School on Nonsinusoidal Currents and Compensation (ISNCC)
Bi-annual meetings in Poland
Chaired by L.S. Czarnecki

A number of different answers to the Steinmetz's question have been suggested:

1927: Budeanu: $S^2 - P^2 = Q_B^2 + D^2$ $\quad Q_B = \sum_{n=1}^{\infty} U_n I_n \sin\varphi_n$

Endorsed by the IEEE Standard Dictionery of Electrical and Electronics Terms in 1992 and German Standards DIN in 1972

1931: Fryze: $S^2 - P^2 = Q_F^2$ $\quad Q_F = \|u\| \|i_{rF}\|$

Endorsed by German Standards DIN in 1972

1971: Shepherd: $S^2 - S_R^2 = Q_S^2$ $\quad Q_S = \|u\| \|i_{rS}\|$

1975: Kusters: $S^2 - P^2 = Q_K^2 + Q_r^2$ $\quad Q_K = \|u\| \|i_{rC}\|$

Endorsed by the International Electrotechnical Commission in 1980

1979: Depenbrock: $S^2 - P^2 = Q_1^2 + V^2 + N^2$ $\quad Q_1 = U_1 I_1 \sin\varphi_1$

2003: Tenti: $S^2 - P^2 = Q_T^2 + D_T^2$ $\quad Q_T = \|u\| \|i_{rT}\|$

Since the Steinmetz's experiment
in 1892, after 91 years
of Power Theory development for single-phase, LTI loads,
such as

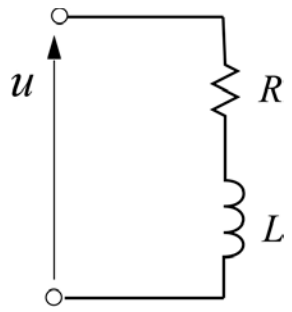

we have had five different power equations and five different reactive powers

Compensation problem was not solved

The problem was eventually solved
in frame of the
Currents' Physical Components (CPC) – based power theory
by
L.S. Czarnecki in 1984

This, eventually a positive result
was a conclusion
of a specific approach to the power theory development.

Its core is the concept
of

Currents' Physical Components (CPC)

According to the CPC concept,
the load current can be decomposed
into

- components associated with distinctive physical phenomena

which are

- mutually orthogonal

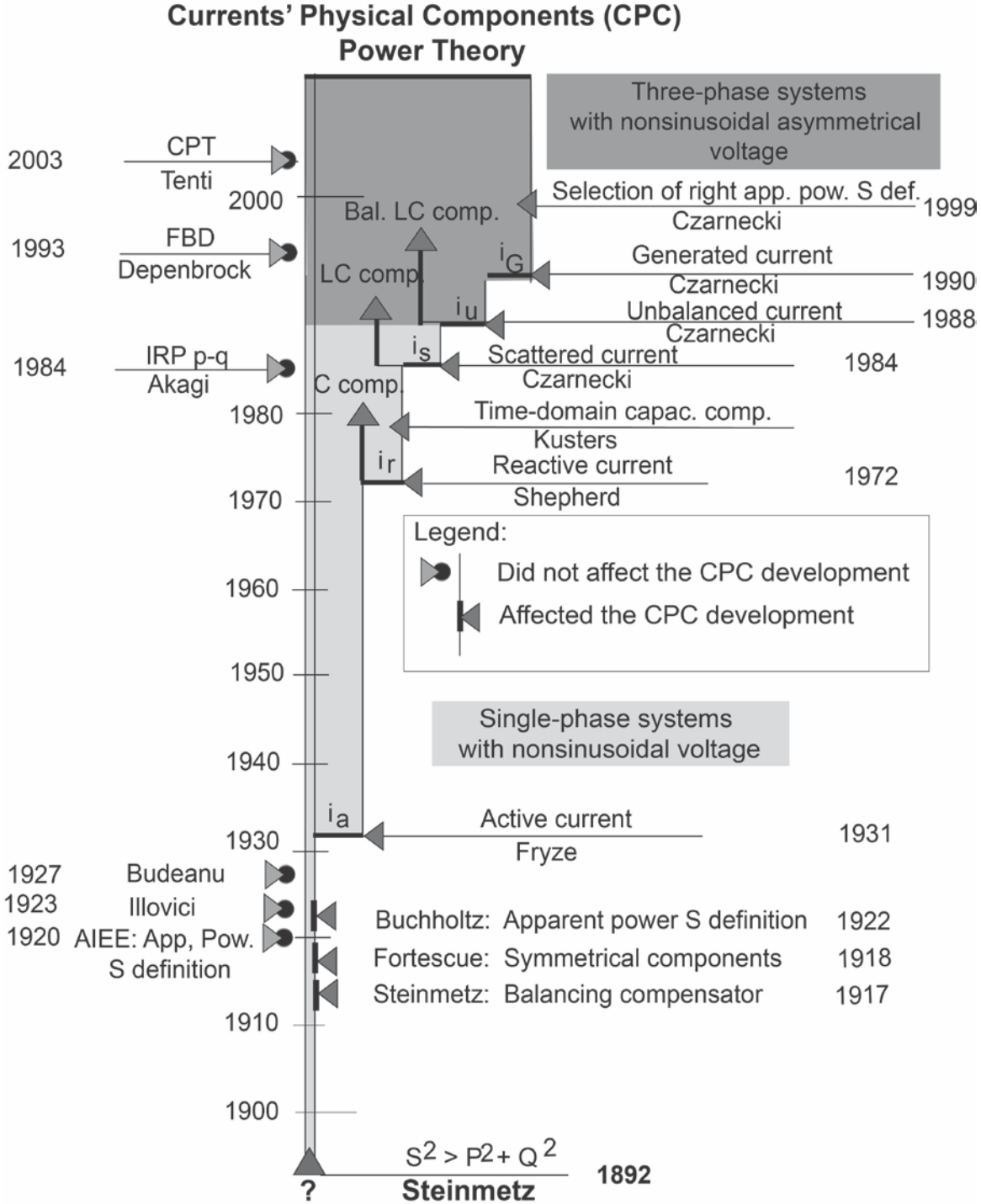
Currents' Physical Components (CPC)
Power Theory
Three-phase systems
with nonsinusoidal asymmetrical
voltage
2003
CPT
Tenti
2000
Bal. LC comp.
Selection of right app. pow. S def.
Czarnecki
1999
1993
FBD
Depenbrock
LC comp.
i_G
Generated current
Czarnecki
1990
i_u
Unbalanced current
Czarnecki
1988
1984
IRP p-q
Akagi
i_s
Scattered current
Czarnecki
1984
C comp.
1980
Time-domain capac. comp.
Kusters
i_r
Reactive current
Shepherd
1972
1970
Legend:
Did not affect the CPC development
Affected the CPC development
1960
1950
Single-phase systems
with nonsinusoidal voltage
1940
i_a
Active current
Fryze
1931
1930
1927
Budeanu
1923
Illovici
1920
AIEE: App, Pow.
S definition
Buchholtz: Apparent power S definition
1922
Fortescue: Symmetrical components
1918
Steinmetz: Balancing compensator
1917
1910
1900
$S^2 > P^2 + Q^2$
?
Steinmetz
1892

Current Physical Components (CPC) in single-phase systems with linear time-invariant loads

L.S. Czarnecki, "Considerations on the reactive power in nonsinusoidal situations," *IEEE Trans. Instr. Meas.,* Vol. IM-34, No. 3, pp. 399-404, March 1984.

L.S. Czarnecki, "Minimization of reactive power in nonsinusoidal situation," *IEEE Trans. Instr. Measur.,* Vol. IM-36, No. 1, pp. 18-22, March 1987.

L.S. Czarnecki, "Scattered and reactive current, voltage, and power in circuits with nonsinusoidal waveforms and their compensation," *IEEE Instr. Measur.,* Vol. 40, No. 3, pp. 563-567, June 1991.

$$u = U_0 + \sqrt{2}\,\mathrm{Re}\sum_{n=1}^{\infty} \boldsymbol{U}_n e^{jn\omega_1 t}$$

$$i = G_0 U_0 + \sqrt{2}\,\mathrm{Re}\sum_{n=1}^{\infty} \boldsymbol{Y}_n \boldsymbol{U}_n e^{jn\omega_1 t}$$

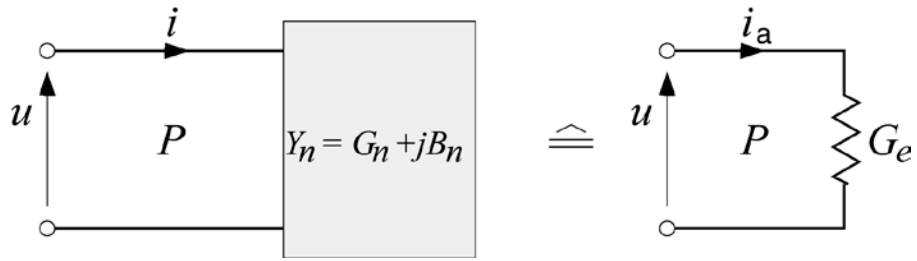

$$i = i_a + i_r + i_s$$

Fryze: (1931) $\quad i_a = G_e u, \qquad G_e = \dfrac{P}{||u||^2}$ $\quad$ Active current

Shepherd: (1971) $\quad i_r = \sqrt{2}\,\mathrm{Re}\sum_{n=1}^{\infty} jB_n \boldsymbol{U}_n e^{jn\omega_1 t}$ $\quad$ Reactive current

Czarnecki: (1984) $\quad i_s = (G_0 - G_e)U_0 + \sqrt{2}\,\mathrm{Re}\sum_{n=1}^{\infty}(G_n - G_e)\boldsymbol{U}_n e^{jn\omega_1 t}$ $\quad$ Scattered current

This decomposition reveals a new power phenomenon:

the existance
of the scattered current, $\boldsymbol{i_s}$,

that occurs when the load conductance, G_n, changes with harmonic order, n.

Current Physical Components (CPC) In single-phase systems with harmonics generating loads (HGL)

L.S. Czarnecki, "An orthogonal decomposition of the current of nonsinusoidal voltage source applied to nonlinear loads," *Int. Journal on Circuit Theory and Appl.,* Vol. 11, 1983.

L.S. Czarnecki and T. Swietlicki, "Powers in nonsinusoidal networks, their analysis, interpretation and measurement," *IEEE Trans. Instr. Measur.,* Vol. IM-39, No. 2, April 1990**.**

$e = 100\sqrt{2}\,\sin\omega_1 t$ V

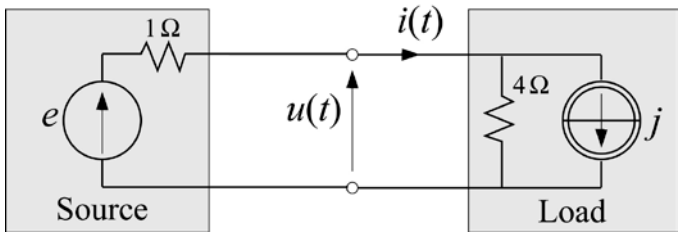

$j = 50\sqrt{2}\,\sin 3\omega_1 t$ A

$$i = \sqrt{2}(20\sin\omega_1 t + 40\sin 3\omega_1 t)\ \text{A} \qquad \|i\| = 44.7\ \text{A}$$

$$u = \sqrt{2}(80\sin\omega_1 t - 40\sin 3\omega_1 t)\ \text{V} \qquad \|u\| = 89.4\ \text{V}$$

$$S = 4.0\ \text{kW}$$

$$P = 1600 - 1600 = 0, \qquad Q = 0$$

How to write power equation for such a circuit?

This circuit reveals
that at some harmonic frequencies
the energy flows from the load back to the supply source
thus

$$P_n < 0$$

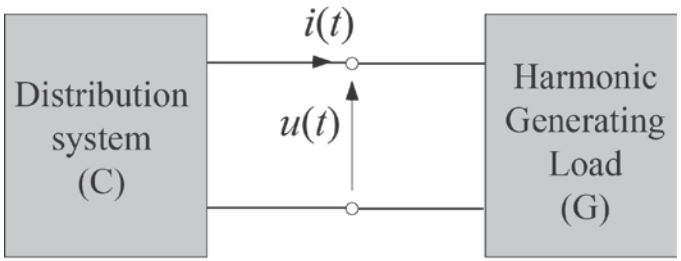

$$P_n = U_n I_n \cos\{\varphi_n\} \begin{cases} \geq 0, & n \in N_C, \quad \text{energy flows to the load} \\ < 0, & n \in N_G, \quad \text{energy flows to the supply} \end{cases}$$

Permanent flow of energy at some harmonic frequencies
from the load back to the supply source
can be regarded as a physical phenomenon

$P_n \geq 0, \quad n \in N_C, \quad$ energy flows to the load

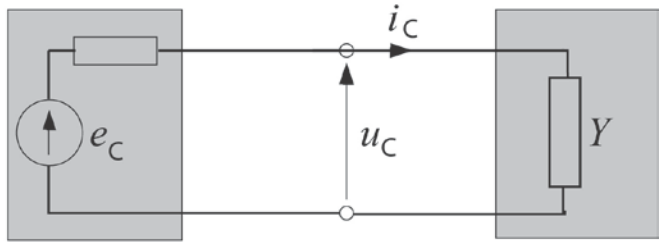

$P_n < 0, \quad n \in N_G, \quad$ energy flows to the supply

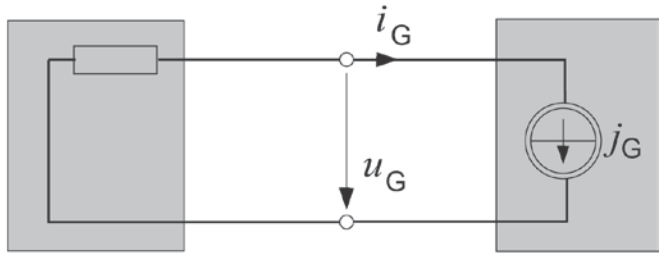

CPC

in single-phase circuits

with Harmonics Generating Loads (HGL)

$$i(t) = i_{\mathrm{Ca}}(t) + i_{\mathrm{Cr}}(t) + i_{\mathrm{Cs}}(t) + i_{\mathrm{G}}(t)$$

$$i_{\mathrm{Ca}} = G_{\mathrm{e}} u_{\mathrm{C}}, \qquad G_{\mathrm{Ce}} = \frac{P_{\mathrm{C}}}{\|u_{\mathrm{C}}\|^2}$$

Active current

$$i_{\mathrm{Cs}} = \sqrt{2}\,\mathrm{Re} \sum_{n \in N_{\mathrm{C}}} (G_n - G_{\mathrm{Ce}}) \boldsymbol{U}_n e^{jn\omega_1 t}$$

Scattered current

$$i_{\mathrm{Cr}} = \sqrt{2}\,\mathrm{Re} \sum_{n \in N_{\mathrm{C}}} jB_n \boldsymbol{U}_n e^{jn\omega_1 t}$$

Reactive current

$$i_{\mathrm{G}} = \sum_{n \in N_{\mathrm{G}}} i_n$$

Load generated current

Current Physical Components (CPC)
in three-phase systems with linear time-invariant (LTI) loads
with sinusoidal voltage

L.S. Czarnecki, "Orthogonal decomposition of the current in a three-phase non-linear asymmetrical circuit with nonsinusoidal voltage," *IEEE Trans. Instr. Measur.,* Vol. IM-37, No. 1, March 1988.

L.S. Czarnecki, "Reactive and unbalanced currents compensation in three-phase circuits under nonsinusoidal conditions," *IEEE Trans. Instr. Measur.,* Vol. IM-38, No. 3, June 1989.

L.S. Czarnecki, "Minimization of unbalanced and reactive currents in three-phase asymmetrical circuits with nonsinusoidal voltage," *Proc. IEE,* Vol. 139, Pt. B, No. 4, July 1992.

L.S. Czarnecki, "Power factor improvement of three-phase unbalanced loads with nonsinusoidal voltage," *European Trans. on Electrical Power Systems, ETEP,* Vol. 3, No. 1, Jan./Febr. 1993.

L.S. Czarnecki, "Equivalent circuits of unbalanced loads supplied with symmetrical and asymmetrical voltage and their identification", *Archiv fur Elektrotechnik,* 78 pp. 165-168, 1995.

L.S. Czarnecki, "Energy flow and power phenomena in electrical circuits: illusions and reality," *Archiv fur Elektrotechnik*, (82), No. 4, pp. 10-15, 1999.

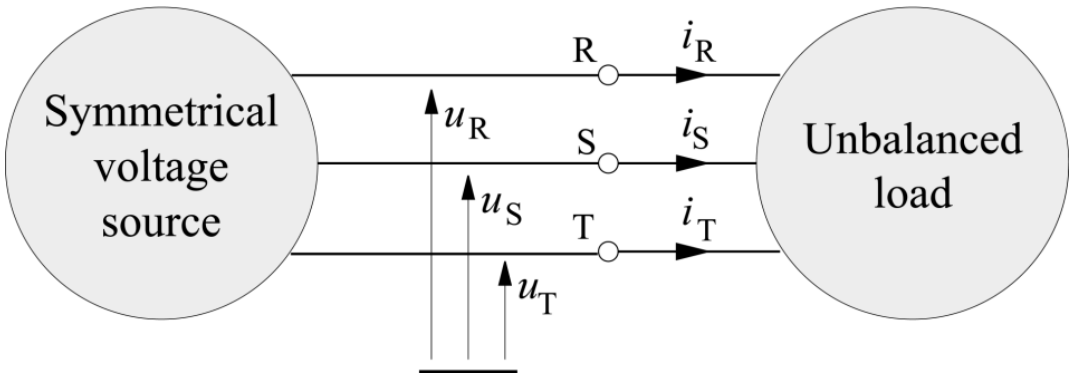

Apparent power definitions:

$$S_A = U_R I_R + U_S I_S + U_T I_T$$

$$S_G = \sqrt{P^2 + Q^2}$$

$$S_B = \sqrt{U_R^2 + U_S^2 + U_T^2}\,\sqrt{I_R^2 + I_S^2 + I_T^2}$$

Which of these three definitions is right?

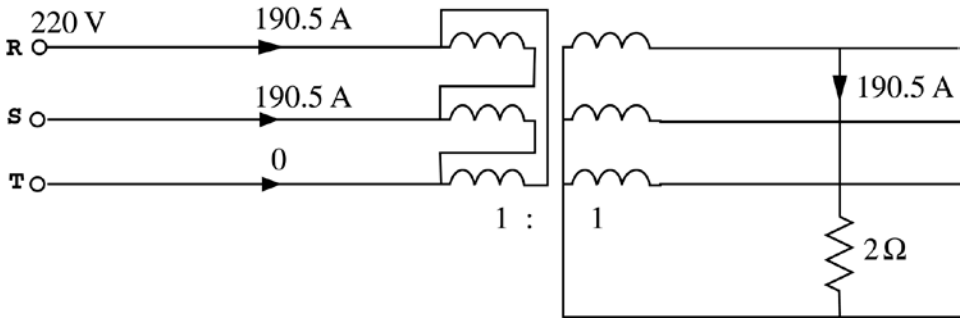

$P = 72.3$ kW

$$S = S_A = U_R I_R + U_S I_S + U_T I_T = 83.8\,\text{kVA}$$

$$S = S_G = \sqrt{P^2 + Q^2} = 72.3\,\text{kVA}$$

$$S = S_B = \sqrt{U_R^2 + U_S^2 + U_T^2}\,\sqrt{I_R^2 + I_S^2 + I_T^2} = 220\sqrt{3} \times 190.2\sqrt{2} = 102.7\,\text{kVA}$$

$$\lambda_A = \frac{P}{S_A} = 0.86 \qquad \lambda_G = \frac{P}{S_G} = 1 \qquad \lambda_B = \frac{P}{S_B} = 0.71$$

Which of these three is the right value of the power factor?

Apparent power definition selection:

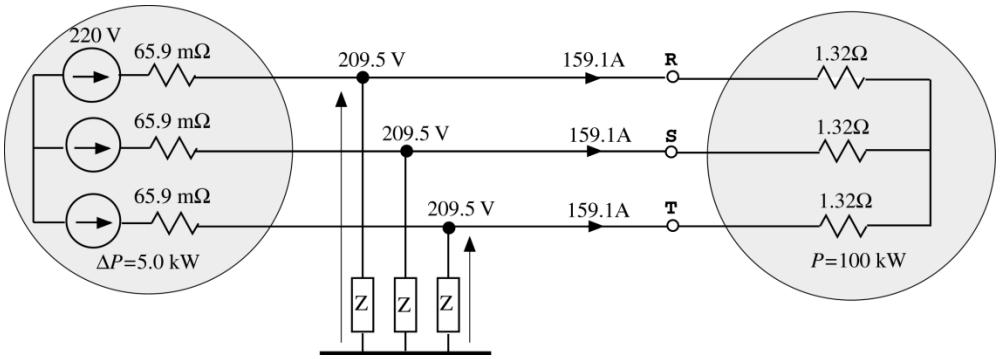

$S_A = S_G = S_B = 100$ kVA

$\lambda_A = \lambda_G = \lambda_B = 1$

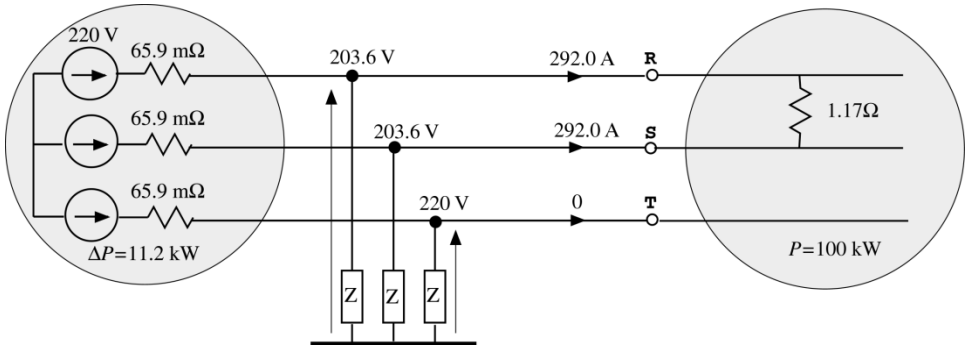

$S_A = 119$ kVA, $\lambda_A = 0.84$

$S_G = 100$ kVA, $\lambda_G = 1$

$S_B = 149$ kVA, $\lambda_B = 0.67$

Geometrical definition of the apparent power S_G results in unity power factor in spite of increase of energy loss at delivery

The apparent power should not be calculated according to geometrical definition

$$S_G = \sqrt{P^2 + Q^2}$$

It is wrong

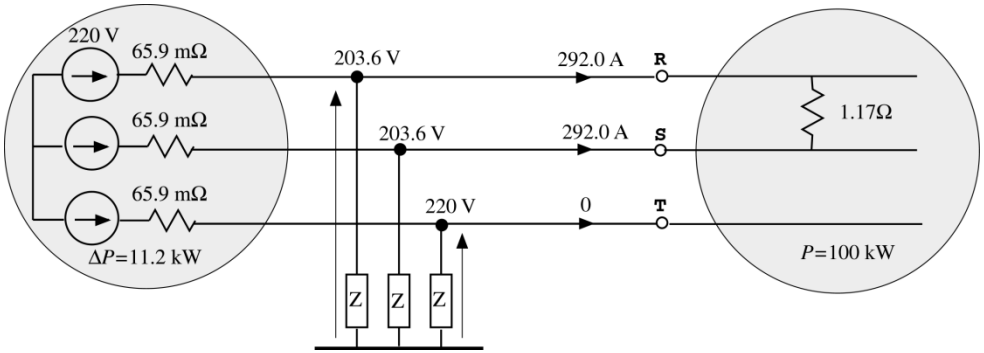

S_A= 119 kVA, λ_A= 0.84

S_G= 100 kVA, λ_G= 1

S_B= 149 kVA, λ_B= 0.67

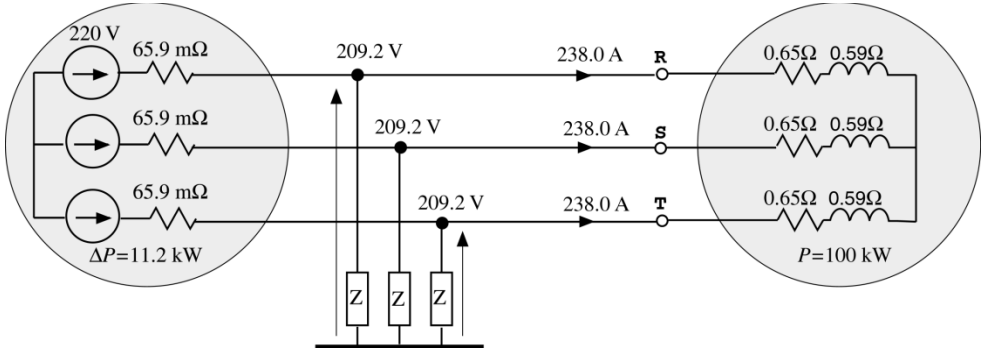

$S_A = S_G = S_B$=149 kVA

$\lambda_A = \lambda_G = \lambda_B$= 0.67

Power loss in the supply of unbalanced load
is the same as power loss of a balanced load when the apparent power
is calculated according to formula

$$S = \sqrt{U_R^2 + U_S^2 + U_T^2}\,\sqrt{I_R^2 + I_S^2 + I_T^2}$$

L.S. Czarnecki, "Energy flow and power phenomena in electrical circuits: illusions and reality," *Archiv fur Elektrotechnik*, (82), No. 4, pp. 10-15, 1999.

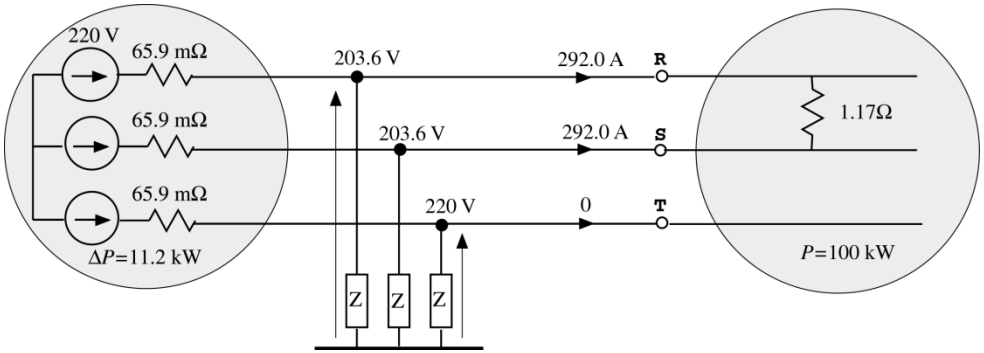

S_A= 119 kVA, λ_A= 0.84

S_G= 100 kVA, λ_G= 1

S_B= 149 kVA, λ_B= 0.67

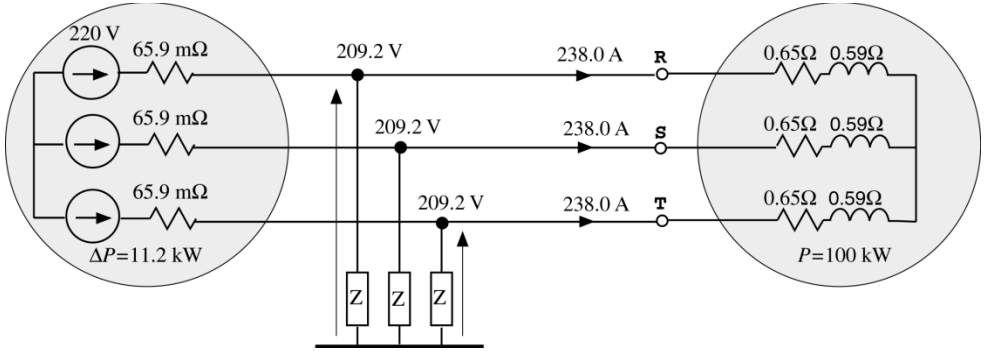

$S_A = S_G = S_B$=149 kVA

$\lambda_A = \lambda_G = \lambda_B$= 0.67

Also arithmetical definition of the apparent power S_A results in a wrong value of the power factor.

The apparent power should not be calculated according to arithmetical definition

$$S_A = U_R I_R + U_S I_S + U_T I_T$$

It is wrong

Numerical illustration:

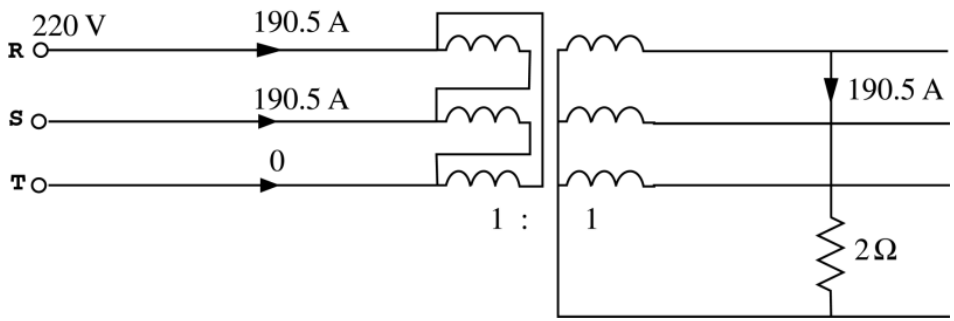

$$S = \sqrt{U_R^2 + U_S^2 + U_T^2}\,\sqrt{I_R^2 + I_S^2 + I_T^2} = 102.7\ \text{kVA}$$

$$P = 72.6\ \text{kW}$$

$$Q = 0$$

The relationship: $S^2 = P^2 + Q^2$ is not fulfilled by these values

This power equation is erroneous

Three phase vectors and their scalar product

Three-phase structure, combined with Fourier decomposition
makes equations of three-phase nonsinusoidal systems
complex and illegible
More compact mathematical symbols are needed to simplify such equations

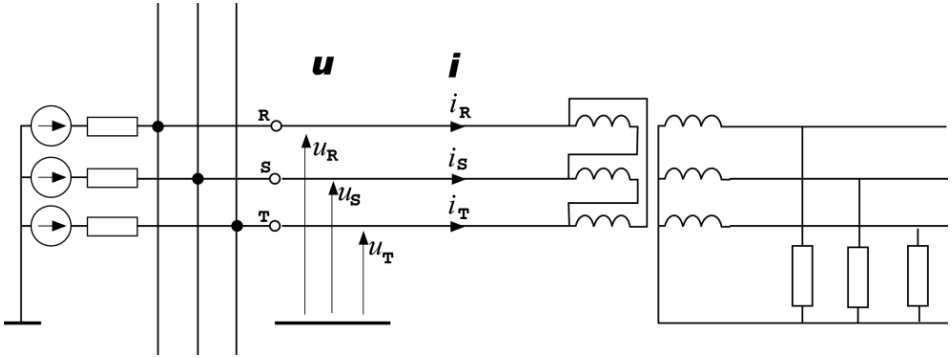

$$\boldsymbol{u}(t) = \begin{bmatrix} u_R(t) \\ u_S(t) \\ u_T(t) \end{bmatrix} = \boldsymbol{u}, \quad \boldsymbol{i}(t) = \begin{bmatrix} i_R(t) \\ i_S(t) \\ i_T(t) \end{bmatrix} = \boldsymbol{i}$$

$$P = \frac{1}{T}\int_0^T (u_R\, i_R + u_S\, i_S + u_T\, i_T)\, dt = \frac{1}{T}\int_0^T \boldsymbol{u}^T(t)\, \boldsymbol{i}(t)\, dt = (\boldsymbol{u}, \boldsymbol{i})$$

Scalar product of three-phase vectors, $\boldsymbol{x}(t)$ and $\boldsymbol{y}(t)$

$$(\boldsymbol{x}, \boldsymbol{y}) = \frac{1}{T}\int_0^T \boldsymbol{x}^T(t)\, \boldsymbol{y}(t)\, dt$$

Vectors, $\boldsymbol{x}(t)$ and $\boldsymbol{y}(t)$ are orthogonal when their scalar product $(\boldsymbol{x}, \boldsymbol{y}) = 0$

RMS value of a Three-Phase quantity

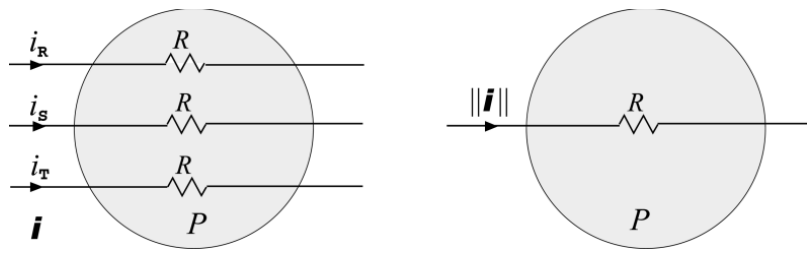

Heat released in such equipment is proportional to the active power

$$P = R\frac{1}{T}\int_0^T (i_R^2 + i_S^2 + i_T^2)\,dt = R\frac{1}{T}\int_0^T \boldsymbol{i}^T(t)\boldsymbol{i}(t)\,dt = R\sqrt{(\boldsymbol{i},\boldsymbol{i})} = R\|\boldsymbol{i}\|^2$$

The quantity:

$$\|\boldsymbol{i}\| = \sqrt{\frac{1}{T}\int_0^T (i_R^2 + i_S^2 + i_T^2)\,dt} = \sqrt{\|i_R\|^2 + \|i_S\|^2 + \|i_T\|^2}$$

is the RMS value of the three phase current.

Similarly

$$\|\boldsymbol{u}\| = \sqrt{\frac{1}{T}\int_0^T (u_R^2 + u_S^2 + u_T^2)\,dt} = \sqrt{\|u_R\|^2 + \|u_S\|^2 + \|u_T\|^2}$$

•

is the RMS value of the three phase voltage

Apparent power

Apparent power is a conventional quantity

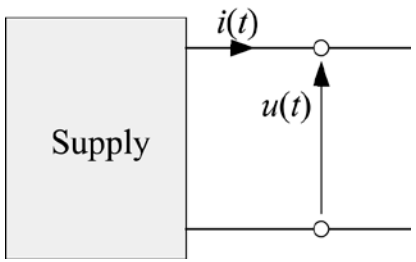

$$S = \|u\| \, \|i\|$$

Product of RMS values of the voltage and current needed for the load supply

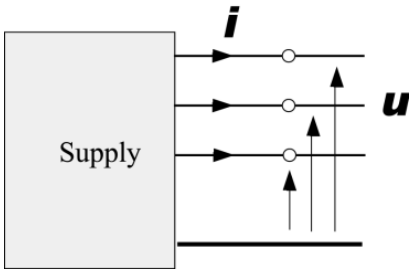

$$S = \|\boldsymbol{u}\| \, \|\boldsymbol{i}\|$$

At sinusoidal voltages and currents

$$S = \sqrt{U_{\mathrm{R}}^2 + U_{\mathrm{S}}^2 + U_{\mathrm{T}}^2} \sqrt{I_{\mathrm{R}}^2 + I_{\mathrm{S}}^2 + I_{\mathrm{T}}^2}$$

CPC at sinusoidal supply voltage

$$\boldsymbol{i} = \begin{bmatrix} i_R \\ i_S \\ i_T \end{bmatrix} = \sqrt{2}\,\mathrm{Re}\begin{bmatrix} \boldsymbol{I}_R \\ \boldsymbol{I}_S \\ \boldsymbol{I}_T \end{bmatrix} e^{j\omega t} = \sqrt{2}\,\mathrm{Re}\,\boldsymbol{I}\,e^{j\omega t}$$

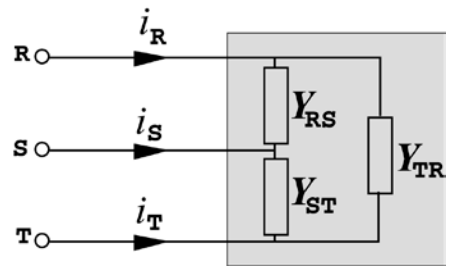

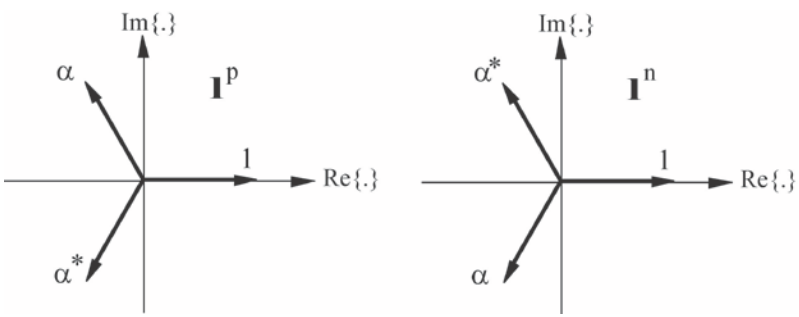

$$\boldsymbol{I}_R = (\boldsymbol{Y}_{RS} + \boldsymbol{Y}_{ST} + \boldsymbol{Y}_{TR})\boldsymbol{U}_R - (\boldsymbol{Y}_{ST} + \alpha\boldsymbol{Y}_{TR} + \alpha^*\boldsymbol{Y}_{RS})\boldsymbol{U}_R$$

$$\boldsymbol{I}_S = (\boldsymbol{Y}_{RS} + \boldsymbol{Y}_{ST} + \boldsymbol{Y}_{TR})\boldsymbol{U}_S - (\boldsymbol{Y}_{ST} + \alpha\boldsymbol{Y}_{TR} + \alpha^*\boldsymbol{Y}_{RS})\boldsymbol{U}_T$$

$$\boldsymbol{I}_T = (\boldsymbol{Y}_{RS} + \boldsymbol{Y}_{ST} + \boldsymbol{Y}_{TR})\boldsymbol{U}_T - (\boldsymbol{Y}_{ST} + \alpha\boldsymbol{Y}_{TR} + \alpha^*\boldsymbol{Y}_{RS})\boldsymbol{U}_S$$

$$\boldsymbol{i} = \sqrt{2}\,\mathrm{Re}\{\mathrm{I}\,e^{j\omega t}\} = \sqrt{2}\,\mathrm{Re}\{[1^p(G_e + jB_e)\boldsymbol{U}_R + 1^n\boldsymbol{Y}_u\boldsymbol{U}_R]e^{j\omega t}\}$$

$$\boldsymbol{Y}_e = G_e + jB_e = \boldsymbol{Y}_{RS} + \boldsymbol{Y}_{ST} + \boldsymbol{Y}_{TR}$$ Equivalent admittance

$$\boldsymbol{Y}_u = -(\boldsymbol{Y}_{ST} + \alpha\boldsymbol{Y}_{TR} + \alpha^*\boldsymbol{Y}_{RS})$$ Unbalanced admittance

$$\boldsymbol{i} = \sqrt{2}\,\mathrm{Re}\{\mathrm{I}e^{j\omega t}\} = \sqrt{2}\,\mathrm{Re}\{[1^{\mathrm{p}}(G_{\mathrm{e}} + jB_{\mathrm{e}})\boldsymbol{U}_{\mathrm{R}} + 1^{\mathrm{n}}\boldsymbol{Y}_{\mathrm{u}}\boldsymbol{U}_{\mathrm{R}}]e^{j\omega t}\}$$

CPC of three-phase LTI load at sinusoidal supply voltage

$$\boldsymbol{i} = \boldsymbol{i}_{\mathrm{a}} + \boldsymbol{i}_{\mathrm{r}} + \boldsymbol{i}_{\mathrm{u}}$$

$$\boldsymbol{i}_{\mathrm{a}} = \sqrt{2}\,\mathrm{Re}\{1^{\mathrm{p}}G_{\mathrm{e}}\boldsymbol{U}_{\mathrm{R}}\,e^{j\omega t}\}$$ Active current

$$\boldsymbol{i}_{\mathrm{r}} = \sqrt{2}\,\mathrm{Re}\{1^{\mathrm{p}}\,jB_{\mathrm{e}}\boldsymbol{U}_{\mathrm{R}}e^{j\omega t}\}$$ Reactive current

$$\boldsymbol{i}_{\mathrm{u}} = \sqrt{2}\,\mathrm{Re}\{1^{\mathrm{n}}\boldsymbol{Y}_{\mathrm{u}}\boldsymbol{U}_{\mathrm{R}}\,e^{j\omega t}\}$$ Unbalanced current

The unbalanced current is associated with the phenomenon of the load current asymmetry

CPC implementation for the reactive and unbalanced currents compensation

$$\lambda = \frac{P}{S} = \frac{\|\boldsymbol{i}_a\|}{\sqrt{\|\boldsymbol{i}_a\|^2 + \|\boldsymbol{i}_u\|^2 + \|\boldsymbol{i}_r\|^2}}$$

$$\boldsymbol{i}_r' = \sqrt{2}\,\mathrm{Re}\{j[B_e + (T_{ST} + T_{TR} + T_{RS})]\, U e^{j\omega_1 t}\}$$

$$\boldsymbol{i}_u' = \sqrt{2}\,\mathrm{Re}\{[\boldsymbol{Y}_u - j(T_{ST} + \alpha T_{TR} + \alpha^* T_{RS})]\, U^{\#} e^{j\omega_1 t}\}$$

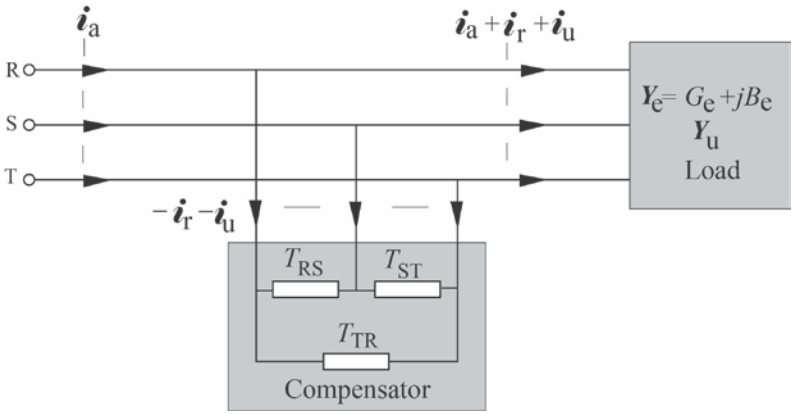

Reactive & unbalanced currents are compensated totally, if:

$$\boldsymbol{Y}_{RSc} = jT_{RS}$$

$$\boldsymbol{Y}_{STc} = jT_{ST}$$

$$\boldsymbol{Y}_{TRc} = jT_{TR}$$

$$B_e + (T_{ST} + T_{TR} + T_{RS}) = 0$$

$$\boldsymbol{Y}_u - j(T_{ST} + \alpha T_{TR} + \alpha^* T_{RS}) = 0$$

Solution:

$$T_{RS} = (\sqrt{3}\,\mathrm{Re}\{\boldsymbol{Y}_u\} - \mathrm{Im}\{\boldsymbol{Y}_u\} - B_e)/3$$

$$T_{ST} = (2\,\mathrm{Im}\{\boldsymbol{Y}_u\} - B_e)/3$$

$$T_{TR} = (-\sqrt{3}\,\mathrm{Re}\{\boldsymbol{Y}_u\} - \mathrm{Im}\{\boldsymbol{Y}_u\} - B_e)/3$$

L.S. Czarnecki: "Reactive and Unbalanced Current Compensation in Three-Phase Circuits under Non-Sinusoidal Conditions", IEEE Trans. Instr. Measurement, Vol. IM-37, 1989

Illustration

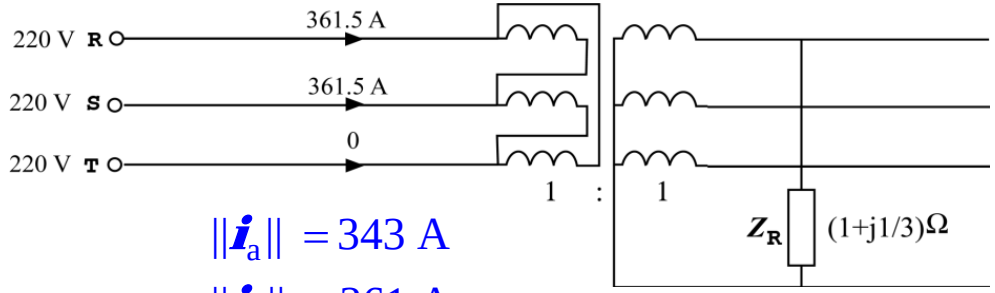

$$\|\boldsymbol{i}_a\| = 343 \text{ A}$$

$$\|\boldsymbol{i}_u\| = 361 \text{ A}$$

S = 195 kVA

$$\|\boldsymbol{i}_r\| = 114 \text{ A}$$

$$\|\boldsymbol{i}\| = 511 \text{ A}$$

$\lambda = 0.67$

Load parameters:

$$\boldsymbol{Y}_e = G_e + jB_e = \boldsymbol{Y}_{RS} = 0.90 - j0.30 \text{ S}$$

$$\boldsymbol{Y}_u = -\alpha * \boldsymbol{Y}_{RS} = 0.95 e^{j42^\circ} = 0.71 + j0.64 \text{ S}$$

$$T_{RS} = (\sqrt{3}\,\mathrm{Re}\,\boldsymbol{Y}_u^n - \mathrm{Im}\,\boldsymbol{Y}_u^n - B_e)/3 = 0.30 \text{ S}$$

$$T_{ST} = (2\,\mathrm{Im}\,\boldsymbol{Y}_u^n - B_e)/3 = 0.52 \text{ S}$$

$$T_{TR} = (-\sqrt{3}\,\mathrm{Re}\,\boldsymbol{Y}_u^n - \mathrm{Im}\,\boldsymbol{Y}_u^n - B_e)/3 = -0.52 \text{ S}$$

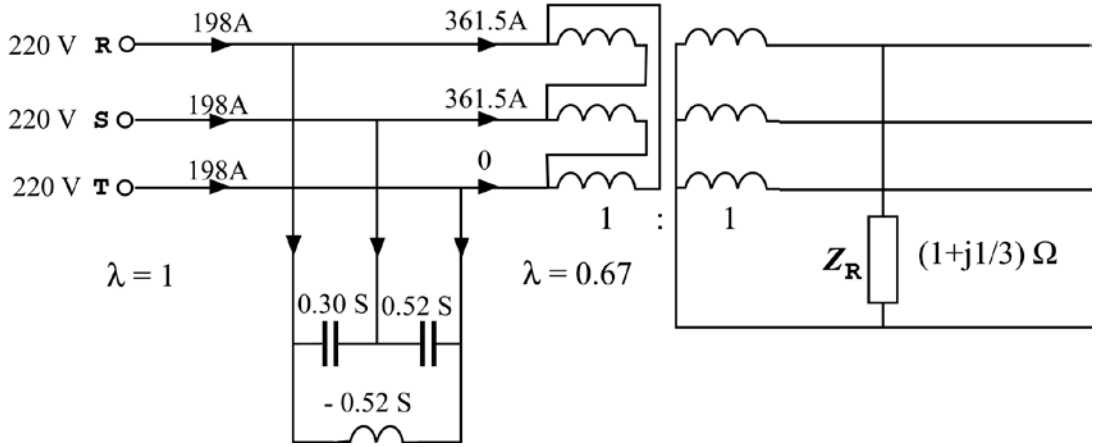

$$\|\boldsymbol{i}_a\| = 343 \text{ A}$$

$$\|\boldsymbol{i}_u\| = 0$$

S = 131 kVA

$$\|\boldsymbol{i}_r\| = 0$$

$$\|\boldsymbol{i}\| = 343 \text{ A}$$

λ=1

Currents' Physical Components (CPC) in three-phase systems with asymmetrical sinusoidal supply voltage

L.S. Czarnecki, P. Bhattarai, "Reactive Compensation of LTI Loads in Three-Wire Systems at Asymmetrical Voltage"
Przegląd Elektrotechniczny, R.91, No. 12/2015, pp. 7-11.

CPC of three-phase LTI loads
at asymmetrical sinusoidal supply voltage

$$\boldsymbol{i} = \boldsymbol{i}_{\mathrm{a}} + \boldsymbol{i}_{\mathrm{r}} + \boldsymbol{i}_{\mathrm{u}}$$

$$\boldsymbol{i}_{\mathrm{a}} = G_{\mathrm{b}}\, \boldsymbol{u}$$

$$\boldsymbol{i}_{\mathrm{r}} = B_{\mathrm{b}}\, \boldsymbol{u}(t + T/4)$$

$$\boldsymbol{i}_{\mathrm{u}} = \sqrt{2}\,\mathrm{Re}\{\boldsymbol{I}_{\mathrm{u}} e^{j\omega t}\} = \sqrt{2}\,\mathrm{Re}\{(\boldsymbol{Y}_{\mathrm{d}}\boldsymbol{U} + \mathbf{1}^{\mathrm{n}}\boldsymbol{Y}_{\mathrm{u}}^{\mathrm{p}}\boldsymbol{U}^{\mathrm{p}} + \mathbf{1}^{\mathrm{p}}\boldsymbol{Y}_{\mathrm{u}}^{\mathrm{n}}\boldsymbol{U}^{\mathrm{n}})e^{j\omega t}\}$$

$$\boldsymbol{Y}_{\mathrm{b}} = G_{\mathrm{b}} + jB_{\mathrm{b}} = \frac{P - jQ}{\|\boldsymbol{u}\|^2}$$

$$\boldsymbol{Y}_{\mathrm{d}} = \frac{2a}{1+a^2}\left[\boldsymbol{Y}_{\mathrm{ST}}\cos\psi + \boldsymbol{Y}_{\mathrm{TR}}\cos\left(\psi - \frac{2\pi}{3}\right) + \boldsymbol{Y}_{\mathrm{RS}}\cos\left(\psi + \frac{2\pi}{3}\right)\right]$$

$$\boldsymbol{a} = a e^{j\psi} = \frac{\boldsymbol{U}^{\mathrm{n}}}{\boldsymbol{U}^{\mathrm{p}}}$$

$$\boldsymbol{Y}_{\mathrm{u}}^{\mathrm{p}} \overset{\mathrm{df}}{=} -(\boldsymbol{Y}_{\mathrm{ST}} + \alpha\boldsymbol{Y}_{\mathrm{TR}} + \alpha^{*}\boldsymbol{Y}_{\mathrm{RS}})$$

$$\boldsymbol{Y}_{\mathrm{u}}^{\mathrm{n}} \overset{\mathrm{df}}{=} -(\boldsymbol{Y}_{\mathrm{ST}} + \alpha^{*}\boldsymbol{Y}_{\mathrm{TR}} + \alpha\boldsymbol{Y}_{\mathrm{RS}})$$

Equivalent circuit of unbalanced LTI load at asymmetrical supply voltage

$$\mathbf{1}^{\mathrm{p}}\boldsymbol{Y}_{\mathrm{u}}^{\mathrm{n}}\boldsymbol{U}^{\mathrm{n}} \overset{\mathrm{df}}{=} \boldsymbol{J}^{\mathrm{p}}$$

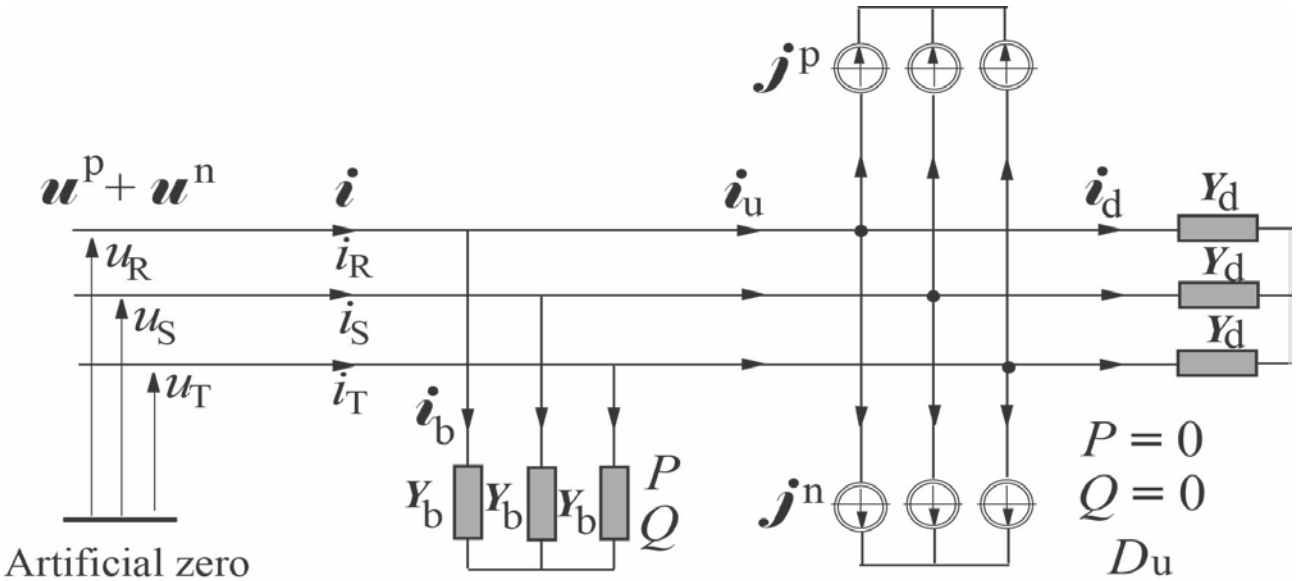

$$\mathbf{1}^{\mathrm{n}}\boldsymbol{Y}_{\mathrm{u}}^{\mathrm{p}}\boldsymbol{U}^{\mathrm{p}} \overset{\mathrm{df}}{=} \boldsymbol{J}^{\mathrm{n}}$$

CPC implementation

for the reactive and the unbalanced currents compensation

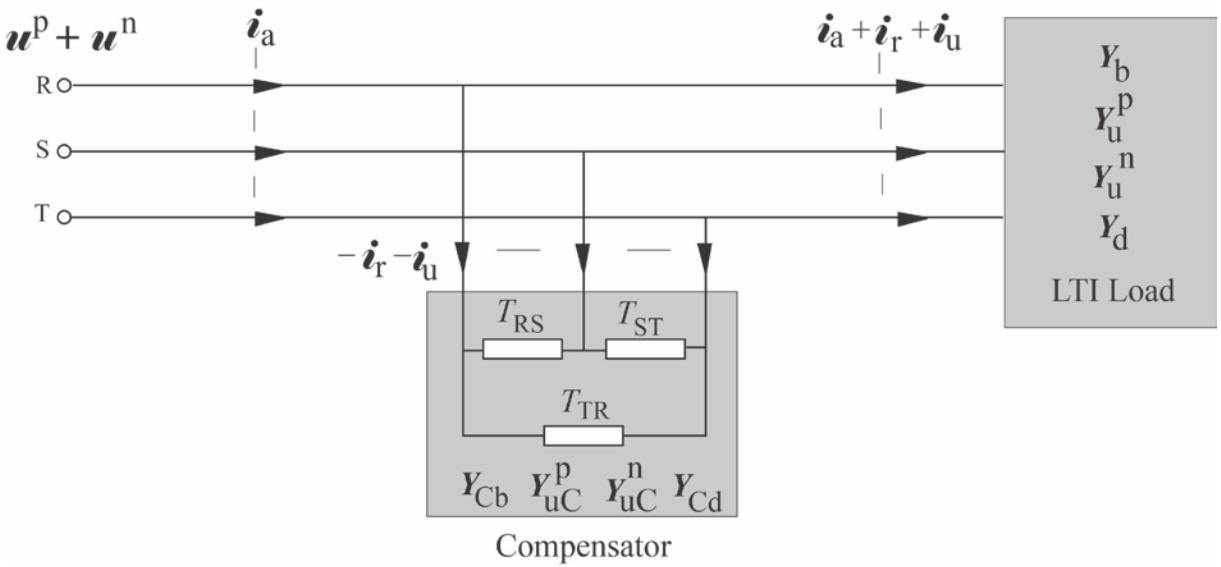

$$B_{\mathrm{Cb}} + B_{\mathrm{b}} = 0 \qquad (\boldsymbol{Y}_{\mathrm{Cd}} + \boldsymbol{Y}_{\mathrm{d}})\boldsymbol{U} + \mathbf{1}^{\mathrm{n}}(\boldsymbol{Y}_{\mathrm{uC}}^{\mathrm{p}} + \boldsymbol{Y}_{\mathrm{u}}^{\mathrm{p}})\boldsymbol{U}^{\mathrm{p}} + \mathbf{1}^{\mathrm{p}}(\boldsymbol{Y}_{\mathrm{uC}}^{\mathrm{n}} + \boldsymbol{Y}_{\mathrm{u}}^{\mathrm{n}})\boldsymbol{U}^{\mathrm{n}} = 0$$

Compensator equation:

$$\begin{bmatrix} U_{\mathrm{RS}}^2 & U_{\mathrm{ST}}^2 & U_{\mathrm{TR}}^2 \\ \mathrm{Re}\boldsymbol{F}_1 & \mathrm{Re}\boldsymbol{F}_2 & \mathrm{Re}\boldsymbol{F}_3 \\ \mathrm{Im}\boldsymbol{F}_1 & \mathrm{Im}\boldsymbol{F}_2 & \mathrm{Im}\boldsymbol{F}_3 \end{bmatrix} \begin{bmatrix} T_{\mathrm{RS}} \\ T_{\mathrm{ST}} \\ T_{\mathrm{TR}} \end{bmatrix} = \begin{bmatrix} -B_{\mathrm{b}} \|\boldsymbol{u}\|^2 \\ -\mathrm{Re}\boldsymbol{F}_4 \\ -\mathrm{Im}\boldsymbol{F}_4 \end{bmatrix}$$

L.S. Czarnecki, P. Bhattarai, “A method of calculation of LC parameters of balancing compensators for AC arc furnaces”, *IEEE Trans. on Power Delivery*, 2016

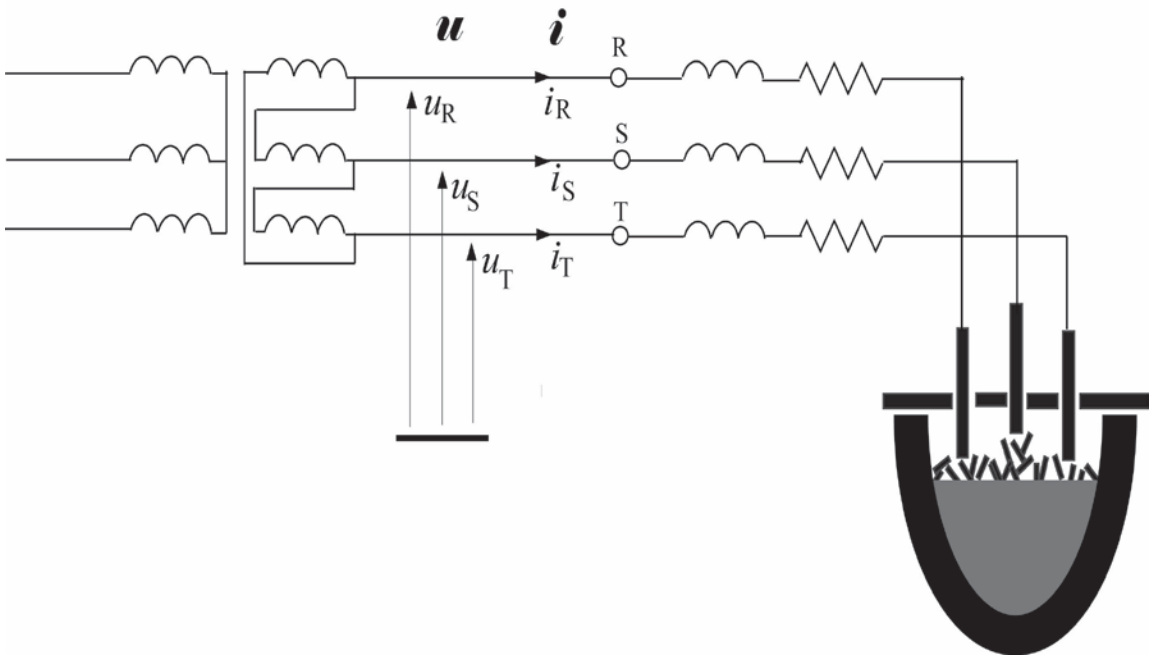

Arc furnace before compensation:

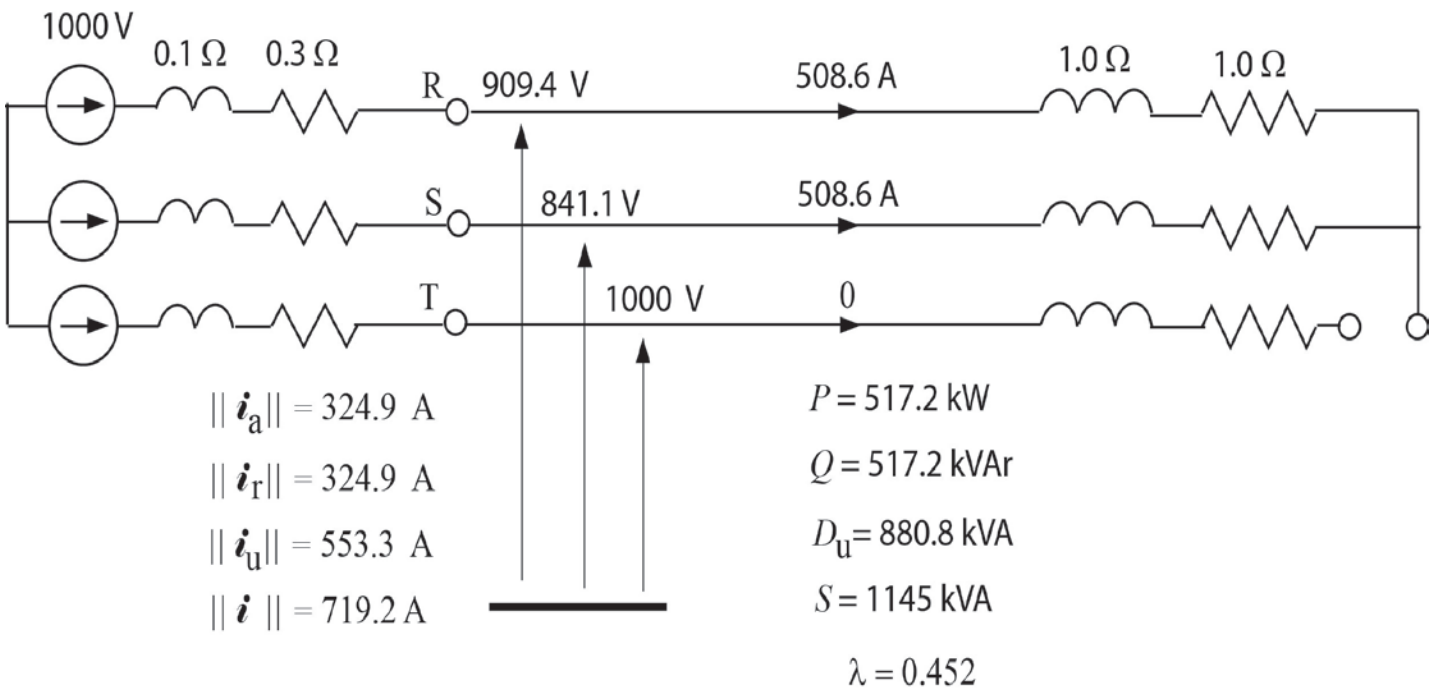

Balancing compensation results:

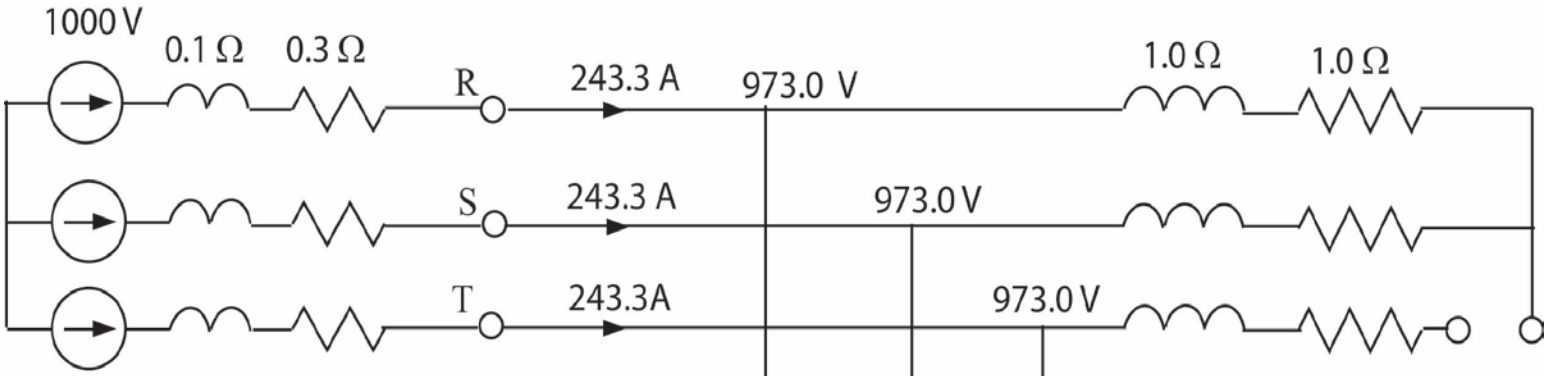

$\|\boldsymbol{i}_a\| = 421.3$ A $\quad P = 710.0$ kW

$\|\boldsymbol{i}_r\| = 0 \quad Q = 0$

$\|\boldsymbol{i}_u\| = 0 \quad D_u = 0$

$\|\boldsymbol{i}\| = 421.3$ A $\quad S = 710.0$ kVA

$\lambda = 1.0$

Current Physical Components(CPC) in linear, time-invariant (LTI) systems
with symmetrical nonsinusoidal voltage

L.S. Czarnecki, "Orthogonal decomposition of the current in a three-phase non-linear asymmetrical circuit with nonsinusoidal voltage," *IEEE Trans. Instr. Measur.,* Vol. IM-37, No. 1, pp. 30-34, March 1988.

L.S. Czarnecki, "Reactive and unbalanced currents compensation in three-phase circuits under nonsinusoidal conditions," *IEEE Trans. Instr. Measur.,* Vol. IM-38, No. 3, pp. 754-459, June 1989.

$$\boldsymbol{u} = \sum_{n\in N} \boldsymbol{u}_n = \sqrt{2}\,\mathrm{Re}\sum_{n\in N} U_n e^{jn\omega_1 t}, \qquad \boldsymbol{i} = \sum_{n\in N} \boldsymbol{i}_n = \sqrt{2}\,\mathrm{Re}\sum_{n\in N} I_n e^{jn\omega_1 t}$$

CPC
of three-phase LTI loads currents at nonsinusoidal supply voltage

$$\boldsymbol{i} = \boldsymbol{i}_\mathrm{a} + \boldsymbol{i}_\mathrm{s} + \boldsymbol{i}_\mathrm{r} + \boldsymbol{i}_\mathrm{u}$$

Active Current: $\boldsymbol{i}_\mathrm{a} = G_\mathrm{e}\,\boldsymbol{u}, \qquad G_\mathrm{e} = \dfrac{P}{\|\boldsymbol{u}\|^2}$

Scattered current: $\boldsymbol{i}_\mathrm{s}(t) \overset{\mathrm{df}}{=} \sqrt{2}\,\mathrm{Re}\sum_{n\in N} (G_{\mathrm{e}n} - G_\mathrm{e})\boldsymbol{U}_n \mathbf{1}_n e^{jn\omega_1 t}$

Reactive current: $\boldsymbol{i}_\mathrm{r}(t) \overset{\mathrm{df}}{=} \sqrt{2}\,\mathrm{Re}\sum_{n\in N} jB_{\mathrm{e}n}\boldsymbol{U}_n \mathbf{1}_n e^{jn\omega_1 t}$

Unbalanced current: $\boldsymbol{i}_\mathrm{u}(t) \overset{\mathrm{df}}{=} \sqrt{2}\,\mathrm{Re}\sum_{n\in N} \boldsymbol{Y}_{\mathrm{u}n}\boldsymbol{U}_n \mathbf{1}_n^* e^{jn\omega_1 t}$

$$\boldsymbol{Y}_{\mathrm{u}n} \overset{\mathrm{df}}{=} -\left(\boldsymbol{Y}_{\mathrm{ST}n} + e^{jn\frac{2\pi}{3}}\boldsymbol{Y}_{\mathrm{TR}n} + e^{-jn\frac{2\pi}{3}}\boldsymbol{Y}_{\mathrm{RS}n}\right) = \begin{cases} \boldsymbol{Y}_{\mathrm{u}n}^{\mathrm{p}}, & \text{for } n = 3k+1 \\ \boldsymbol{Y}_{\mathrm{u}n}^{\mathrm{n}}, & \text{for } n = 3k-1 \end{cases}$$

CPC implementation
for the reactive and unbalanced currents compensation

$$\lambda = \frac{P}{S} = \frac{\|\boldsymbol{i}_{\mathrm{a}}\|}{\sqrt{\|\boldsymbol{i}_{\mathrm{a}}\|^2 + \|\boldsymbol{i}_{\mathrm{s}}\|^2 + \|\boldsymbol{i}_{\mathrm{u}}\|^2 + \|\boldsymbol{i}_{\mathrm{r}}\|^2}}$$

Active & scattered currents are not affected by a reactive compensator

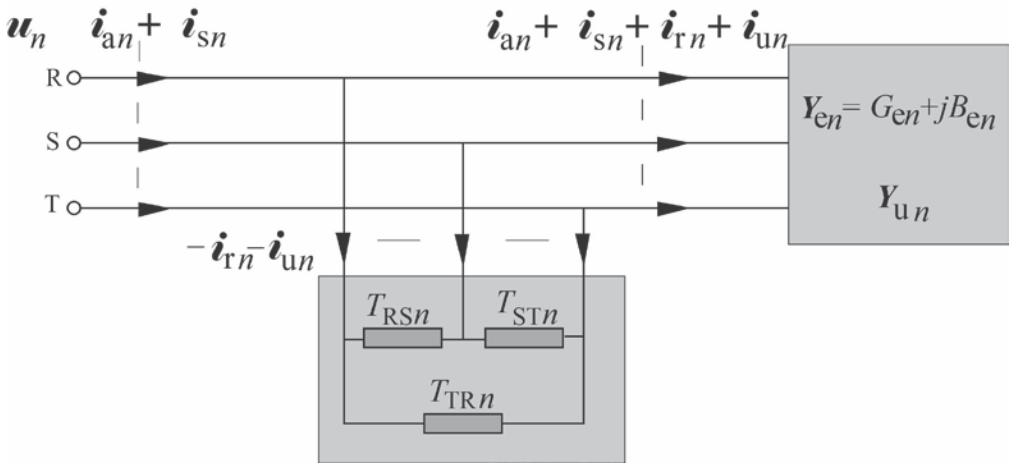

The reactive & unbalanced currents are compensated for each harmonic, if

$$B_{\mathrm{e}n} + (T_{\mathrm{ST}n} + T_{\mathrm{TR}n} + T_{\mathrm{RS}n}) = 0$$

$$\boldsymbol{Y}_{\mathrm{u}n} - j(T_{\mathrm{ST}n} + \beta T_{\mathrm{TR}n} + \beta^* T_{\mathrm{RS}n}) = 0, \qquad \beta = \begin{cases} \alpha & \text{for positive sequence} \\ \alpha^* & \text{for negative sequence} \end{cases}$$

From these equations the susceptances $T_{\mathrm{RS}n}$, $T_{\mathrm{ST}n}$, and $T_{\mathrm{TR}n}$, can be calculated

Example of reactive balancing:

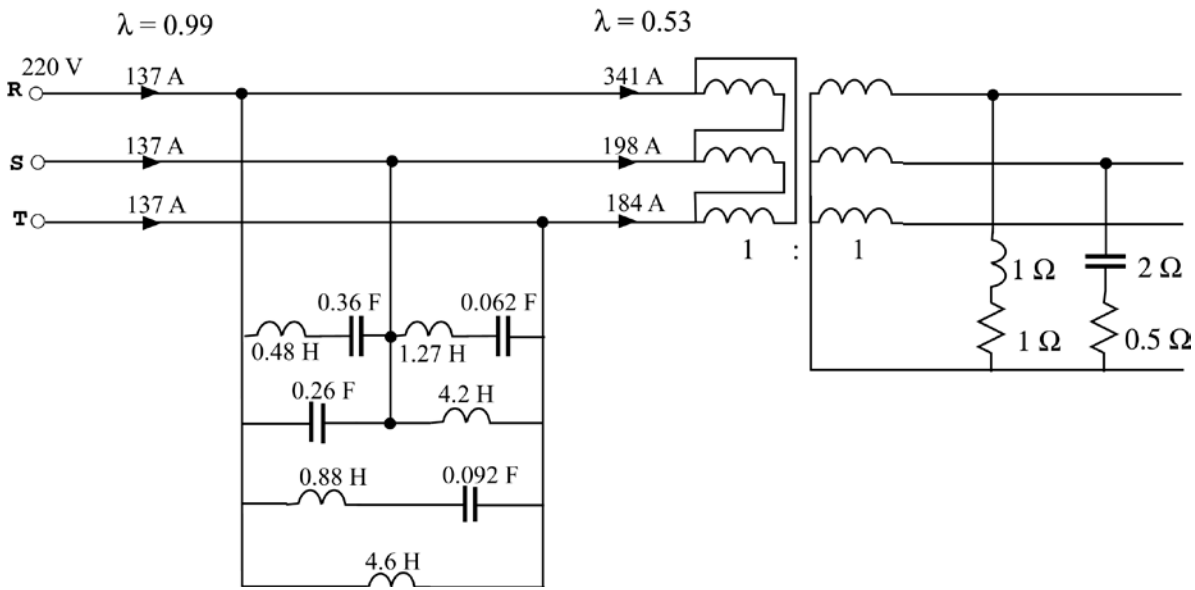

$G_e = 0.6018$ S

$\boldsymbol{Y}_{e1} = 0.60 - j0.40$ S

$\boldsymbol{Y}_{e5} = 0.88 + j0.15$ S

$\boldsymbol{Y}_{u1} = 0.83\, e^{-j0.18\pi}$ S

$\boldsymbol{Y}_{u5} = 1.12\, e^{-j0.86\pi}$ S

$\|\boldsymbol{i}_a\| = 237$ A

$\|\boldsymbol{i}_s\| = 21$ A

$\|\boldsymbol{i}_r\| = 0$

$\|\boldsymbol{i}_u\| = 0$

$\|\boldsymbol{i}\| = 238$ A

$\|\boldsymbol{i}_a\| = 237$ A

$\|\boldsymbol{i}_s\| = 21$ A

$\|\boldsymbol{i}_r\| = 153$ A

$\|\boldsymbol{i}_u\| = 327$ A

$\|\boldsymbol{i}\| = 433$ A

This is an example
of a total compensation
of the reactive and unbalanced currents

CPC implementation for synthesis of reduced complexity reactive balancing compensators

Illustration

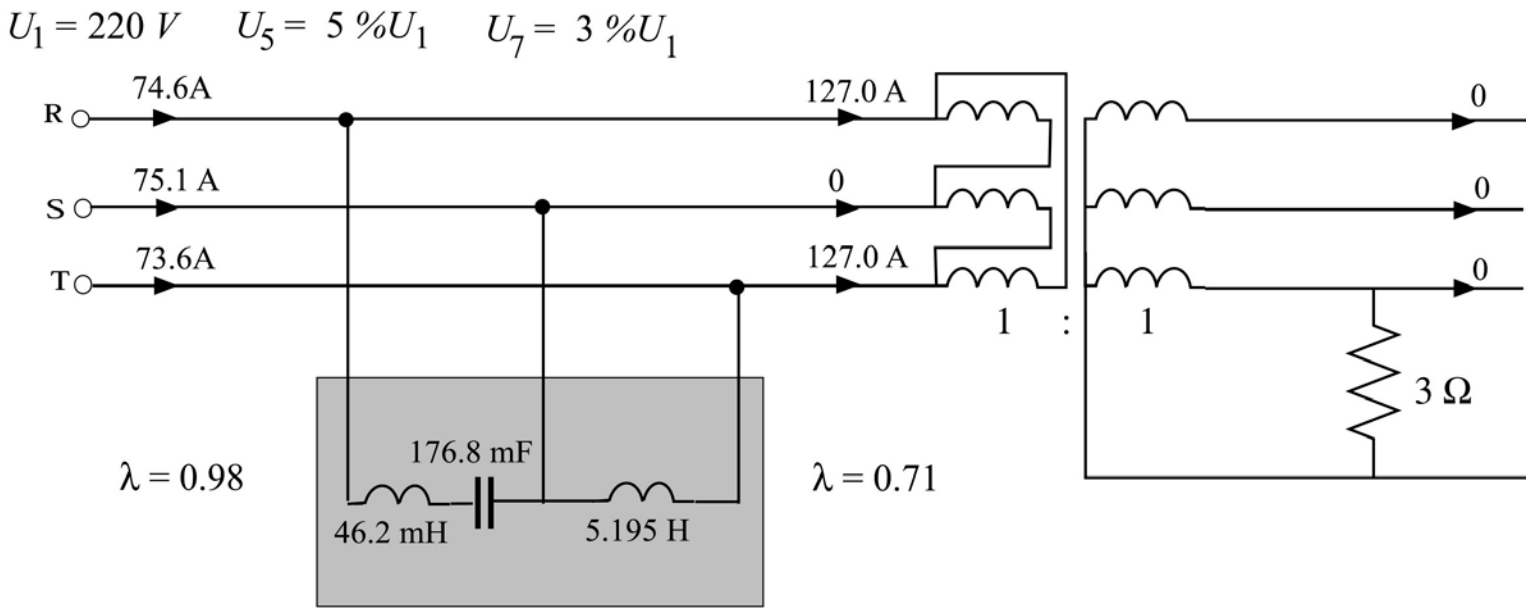

CPC of three-phase LTI loads
with asymmetrical and nonsinusoidal voltages

$$\boldsymbol{i} = \boldsymbol{i}_{\mathrm{a}} + \boldsymbol{i}_{\mathrm{s}} + \boldsymbol{i}_{\mathrm{r}} + \boldsymbol{i}_{\mathrm{u}}$$

Active Current: $$\boldsymbol{i}_{\mathrm{a}} \overset{\mathrm{df}}{=} G_{\mathrm{b}}\,\boldsymbol{u} = \sqrt{2}\,\mathrm{Re}\sum_{n\in N} G_{\mathrm{b}}\,U_n\,e^{jn\omega_1 t}$$

Scattered current: $$\boldsymbol{i}_{\mathrm{s}} \overset{\mathrm{df}}{=} \sqrt{2}\mathrm{Re}\sum_{n\in N}(G_{\mathrm{b}n} - G_{\mathrm{b}})\,U_n e^{jn\omega_1 t}$$

Reactive current: $$\boldsymbol{i}_{\mathrm{r}} \overset{\mathrm{df}}{=} \sum_{n\in N}\boldsymbol{i}_{\mathrm{r}n} = \sqrt{2}\,\mathrm{Re}\sum_{n\in N} jB_{\mathrm{b}n}\,U_n\,e^{jn\omega_1 t}$$

Unbalanced current: $$\boldsymbol{i}_{\mathrm{u}} \overset{\mathrm{df}}{=} \sqrt{2}\mathrm{Re}\sum_{n\in N}(\boldsymbol{Y}_{\mathrm{d}n}U_n + 1^{\mathrm{n}}\boldsymbol{Y}_{\mathrm{u}n}^{\mathrm{p}}\boldsymbol{U}_n^{\mathrm{p}} + 1^{\mathrm{p}}\boldsymbol{Y}_{\mathrm{u}n}^{\mathrm{n}}\boldsymbol{U}_n^{\mathrm{n}})e^{jn\omega_1 t}$$

(With harmonic order *n* neglected for simplicity:)

$$\boldsymbol{Y}_{\mathrm{d}} = 2\,\frac{\boldsymbol{Y}_{\mathrm{ST}}\,\mathrm{Re}\{\boldsymbol{W}\} + \boldsymbol{Y}_{\mathrm{TR}}\,\mathrm{Re}\{\alpha^{*}\boldsymbol{W}\} + \boldsymbol{Y}_{\mathrm{RS}}\,\mathrm{Re}\{\alpha\boldsymbol{W}\}}{U^{\mathrm{p}2} + U^{\mathrm{n}2}}, \qquad \boldsymbol{W} = \boldsymbol{U}^{\mathrm{p}*}\boldsymbol{U}^{\mathrm{n}}$$

$$\boldsymbol{Y}_{\mathrm{u}}^{\mathrm{p}} \overset{\mathrm{df}}{=} -(\boldsymbol{Y}_{\mathrm{ST}} + \alpha\boldsymbol{Y}_{\mathrm{TR}} + \alpha^{*}\boldsymbol{Y}_{\mathrm{RS}}) \qquad \boldsymbol{Y}_{\mathrm{u}}^{\mathrm{n}} \overset{\mathrm{df}}{=} -(\boldsymbol{Y}_{\mathrm{ST}} + \alpha^{*}\boldsymbol{Y}_{\mathrm{TR}} + \alpha\boldsymbol{Y}_{\mathrm{ST}})$$

CPC implementation
for reactive balancing compensator synthesis at asymmetrical voltage

$$E_{R1} = E_{S1} = 100\ \text{V}, \quad E_{T1} = 50\ \text{V},$$

distorted with harmonics of n = 1,3,7 of the rms value

$$E_{R3} = E_{R5} = E_{R7} = 20\text{V}$$

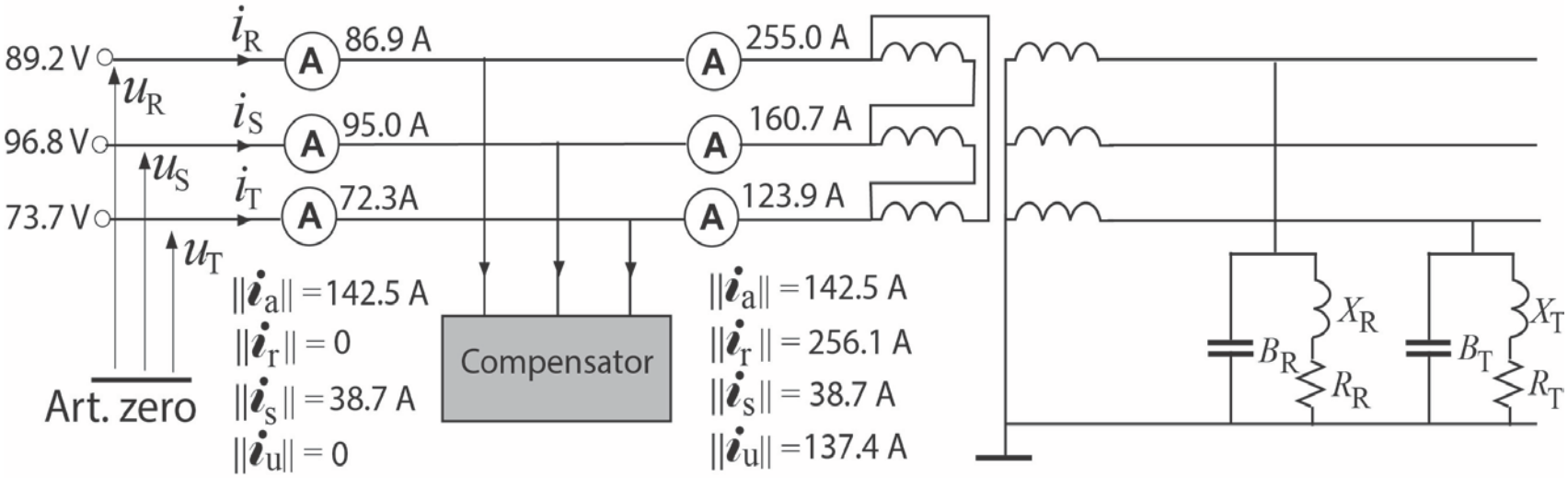

CPC implementation
for synthesis of a compensator
that minimizes the reactive and unbalanced currents
at asymmetrical & nonsinusoidal voltage and non-zero source impedance

$E_{S1} = 0.97E_{R1}$, $E_T = 0.97E_{R1}$, $E_3 = E_5 = E_7 = 4\%$ of $E_1 = 100$ V

$$S_{sc}/P = 20$$

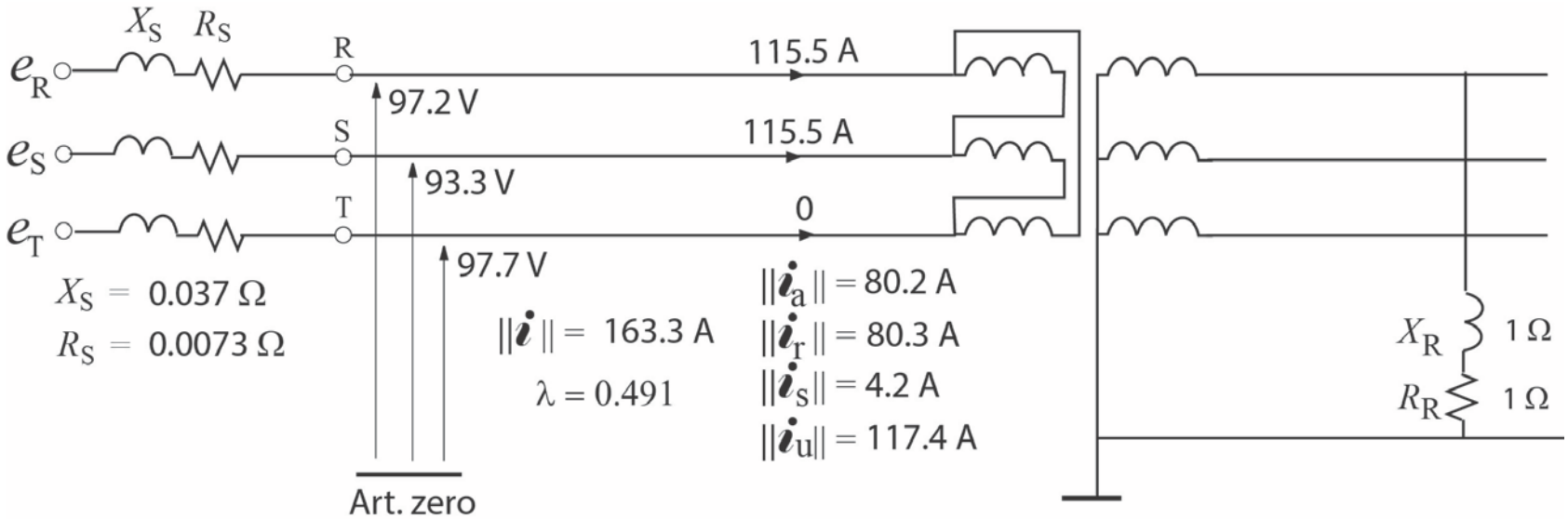

CPC implementation
for synthesis of a compensator
that minimizes the reactive and unbalanced currents
at asymmetrical & nonsinusoidal voltage and non-zero source impedance

$E_{S1} = 0.97E_{R1}$, $E_T = 0.97E_{R1}$, $E_3 = E_5 = E_7 = 4\%$ of $E_1 = 100$ V

$$S_{sc}/P = 20$$

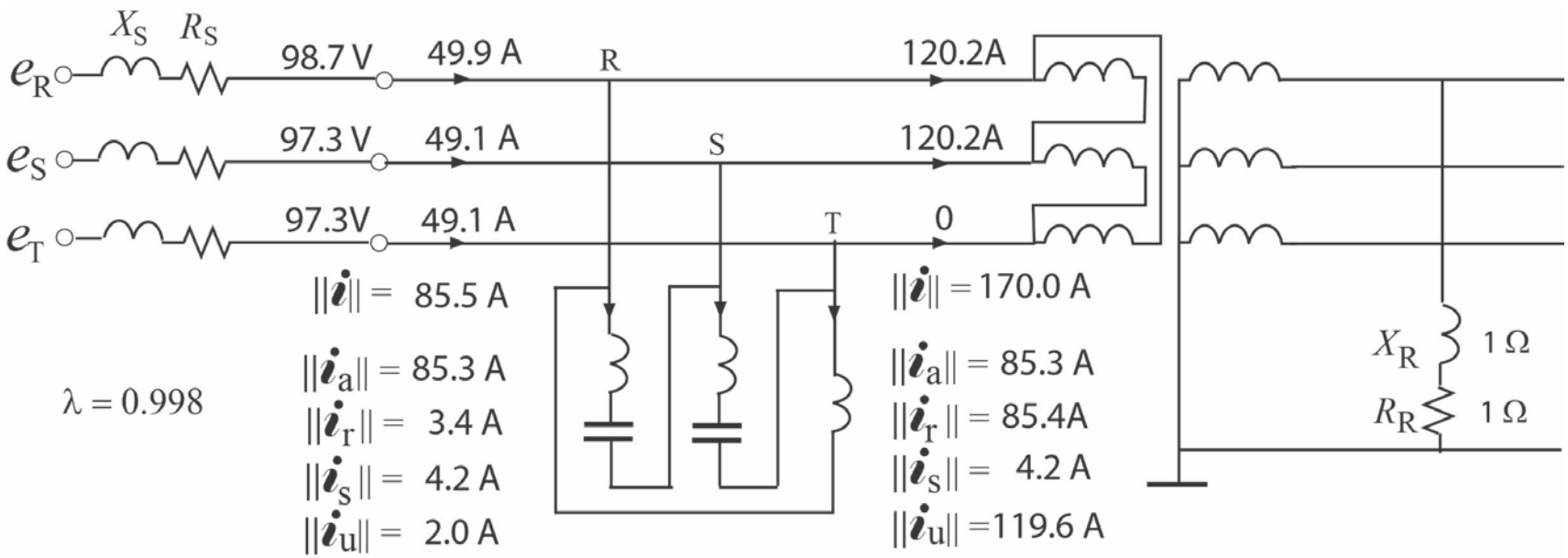

Current Physical Components (CPC) of three-phase LTI loads supplied by four-wire line with sinusoidal symmetrical voltage

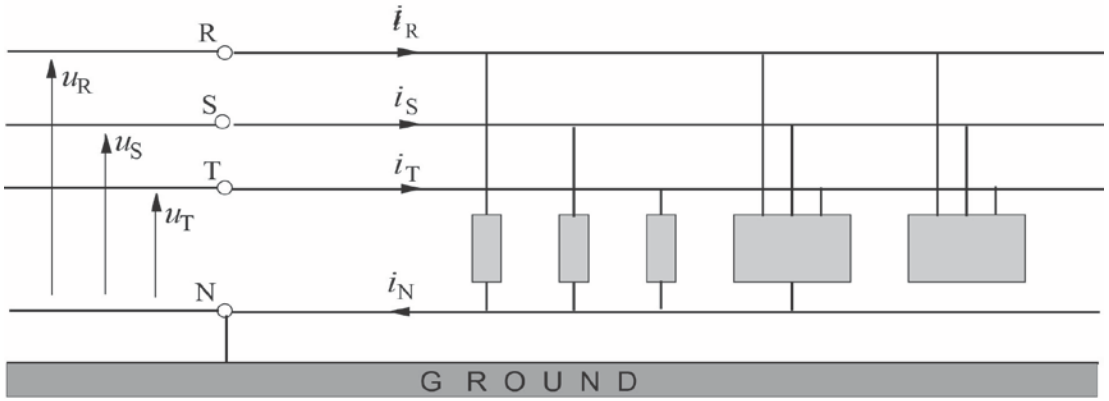

L.S. Czarnecki, P.M. Haley, "Power properties of four-wire systems at nonsinusoidal supply voltage," IEEE Trans. on Power Delivery, Vol. 31, No. 2, 2016, pp. 513-521.

L.S. Czarnecki, P.M. Haley, "Unbalanced power in four-wire systems and its reactive compensation", IEEE Trans. on Power Delivery, Vol. 30, No. 1, Feb. 2015, pp. 53-63.

L.S. Czarnecki, P.H. Haley, "Currents' Physical Components (CPC) in Four-Wire Systems with Nonsinusoidal Symmetrical Voltage," *Przegląd Elektrotechniczn*y R.91, No. 6/2015, pp. 48-53.

Currents' Physical Components in four-wire unbalanced system

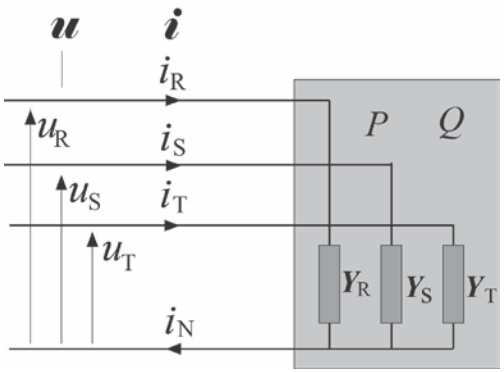

$$\boldsymbol{Y}_e = G_e + jB_e = \frac{P - jQ}{\|\boldsymbol{u}\|^2} = \frac{1}{3}(\boldsymbol{Y}_R + \boldsymbol{Y}_S + \boldsymbol{Y}_T)$$

$$\boldsymbol{Y}_u^n \overset{df}{=} \frac{1}{3}(\boldsymbol{Y}_R + \alpha \boldsymbol{Y}_S + \alpha^* \boldsymbol{Y}_T)$$

$$\boldsymbol{Y}_u^z \overset{df}{=} \frac{1}{3}(\boldsymbol{Y}_R + \alpha^* \boldsymbol{Y}_S + \alpha \boldsymbol{Y}_T)$$

$$\boldsymbol{i} = \boldsymbol{i}_a + \boldsymbol{i}_r + \boldsymbol{i}_u^n + \boldsymbol{i}_u^z$$

$$\boldsymbol{i}_a(t) = G_e\, \boldsymbol{u}(t)$$ Active Current:

$$\boldsymbol{i}_r(t) = B_e \frac{d}{d(\omega t)} \boldsymbol{u}(t)\,.$$ Reactive current:

$$\boldsymbol{i}_u^n \overset{df}{=} \sqrt{2}\mathrm{Re}\{1^n \boldsymbol{Y}_u^n \boldsymbol{U}_R e^{j\omega t}\}$$ Unbalanced current of negative sequence:

$$\boldsymbol{i}_u^z \overset{df}{=} \sqrt{2}\mathrm{Re}\{1^z \boldsymbol{Y}_u^z \boldsymbol{U}_R e^{j\omega t}\}.$$ Unbalanced current of zero sequence

CPC-based
equivalent circuit of four-wire supplied loads

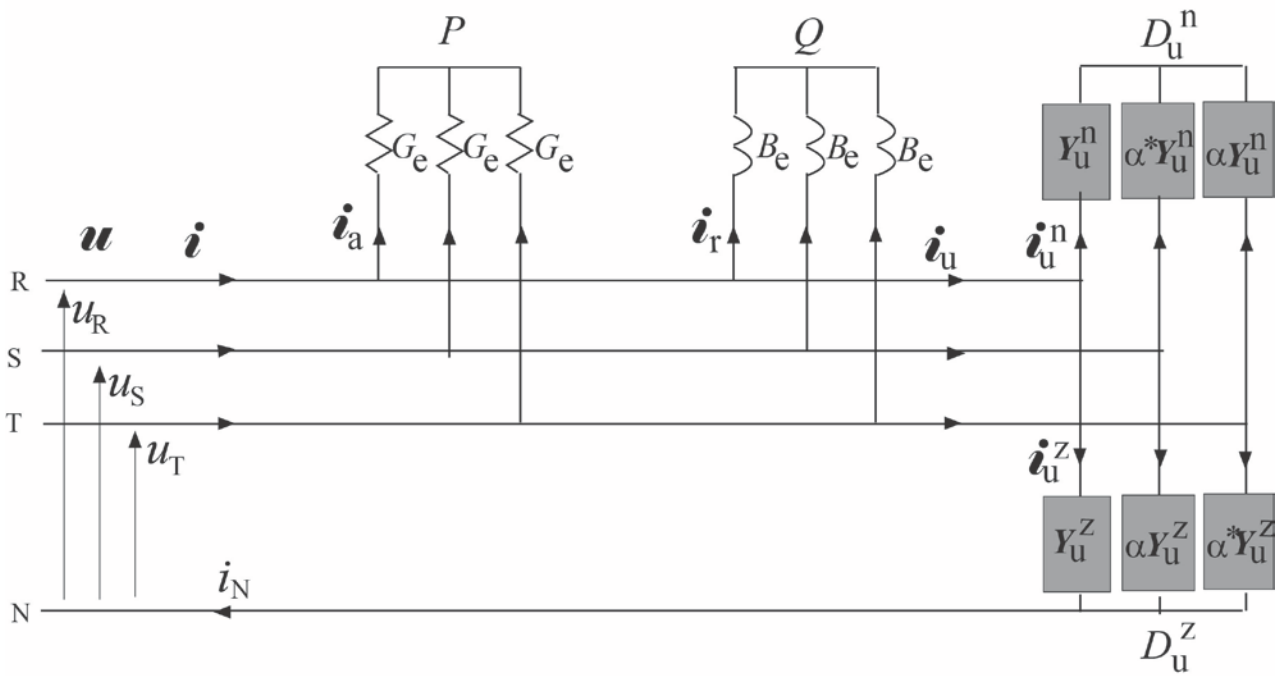

Numerical illustration

U = 120V

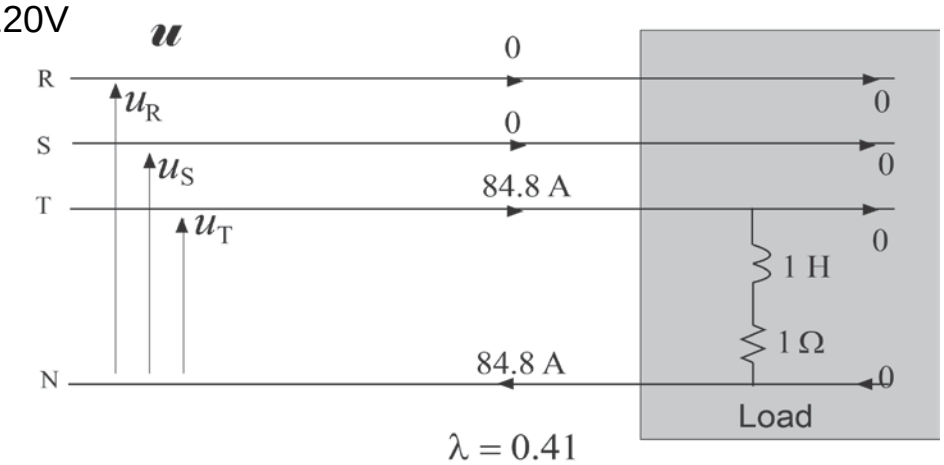

$$\boldsymbol{Y}_e = G_e + jB_e = \frac{1}{3}(\boldsymbol{Y}_R + \boldsymbol{Y}_S + \boldsymbol{Y}_T) = 0.167 - j0.167 \ \text{S}$$

$$\boldsymbol{Y}_u^n = \frac{1}{3}(\boldsymbol{Y}_R + \alpha \boldsymbol{Y}_S + \alpha^* \boldsymbol{Y}_T) = 0.236 e^{-j165^0} \ \text{S}$$

$$\boldsymbol{Y}_u^z = \frac{1}{3}(\boldsymbol{Y}_R + \alpha^* \boldsymbol{Y}_S + \alpha \boldsymbol{Y}_T) = 0.236 e^{j75^0} \ \text{S}.$$

$$\|\boldsymbol{u}\| = \sqrt{3} U_R = \sqrt{3} \times 120 = 207.8 \ \text{V}$$

$$\|\boldsymbol{i}_a\| = G_e \|\boldsymbol{u}\| = 0.167 \times 207.8 = 34.7 \ \text{A}$$

$$\|\boldsymbol{i}_r\| = |B_e| \|\boldsymbol{u}\| = 0.167 \times 207.8 = 34.7 \ \text{A}$$

$$\|\boldsymbol{i}_u^n\| = Y_u^n \|\boldsymbol{u}\| = 0.236 \times 207.8 = 49.0 \ \text{A}$$

$$\|\boldsymbol{i}_u^z\| = Y_u^z \|\boldsymbol{u}\| = 0.236 \times 207.8 = 49.0 \ \text{A}.$$

CPC implementation
for balancing compensator in four wire system synthesis

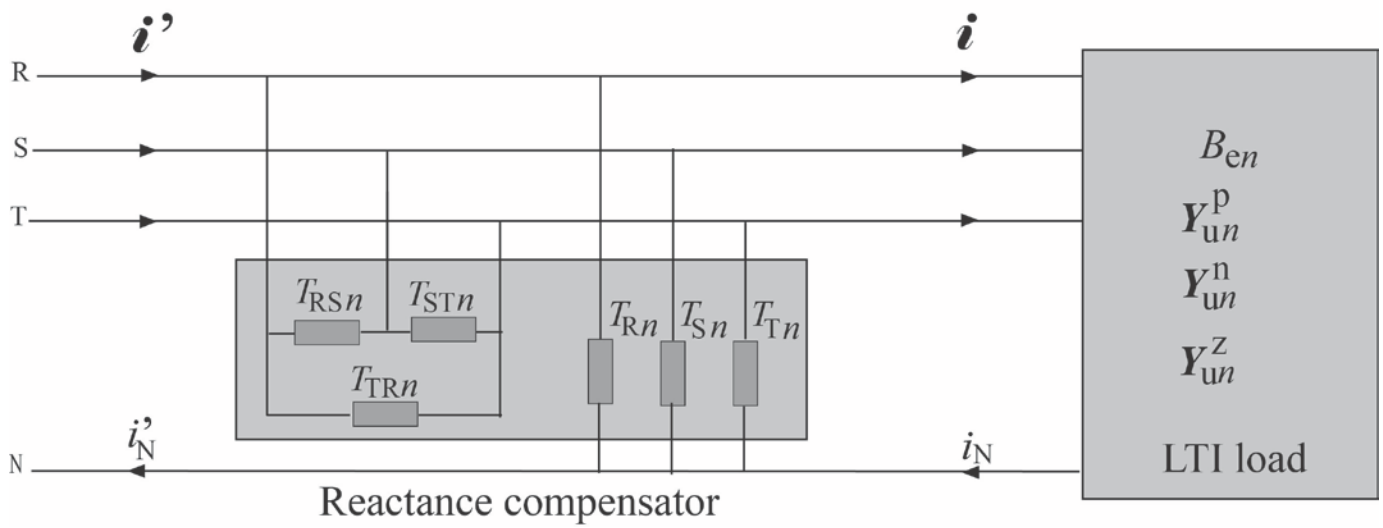

$$\boldsymbol{i}'^{\,n}_u \equiv 0 \quad \text{if} \; j(T_{ST} + \alpha T_{TR} + \alpha^* T_{RS}) + \boldsymbol{Y}'^{\,n}_u = 0$$

$$T_{RS} = (\sqrt{3}\,\mathrm{Re}\,\boldsymbol{Y}'^{\,n}_u - \mathrm{Im}\,\boldsymbol{Y}'^{\,n}_u)/3$$

$$T_{ST} = (2\,\mathrm{Im}\,\boldsymbol{Y}'^{\,n}_u)/3$$

$$T_{TR} = (-\sqrt{3}\,\mathrm{Re}\,\boldsymbol{Y}'^{\,n}_u - \mathrm{Im}\,\boldsymbol{Y}'^{\,n}_u)/3$$

$$\boldsymbol{i}'_r \equiv 0 \quad \text{if} \quad \frac{1}{3}(T_R + T_S + T_T) + B_e = 0$$

$$\boldsymbol{i}'^{\,z}_u \equiv 0 \quad \text{if} \quad \frac{1}{3} j(T_R + \alpha^* T_S + \alpha T_T) + \boldsymbol{Y}^z_u = 0$$

$$T_R = -2\,\mathrm{Im}\,\boldsymbol{Y}^z_n - B_e$$

$$T_S = -\sqrt{3}\,\mathrm{Re}\,\boldsymbol{Y}^z_n + \mathrm{Im}\,\boldsymbol{Y}^z_n - B_e$$

$$T_T = \sqrt{3}\,\mathrm{Re}\,\boldsymbol{Y}^z_n + \mathrm{Im}\,\boldsymbol{Y}^z_n - B_e\,.$$

Compensator of zero sequence unbalanced current

$$T_R = -2\,\mathrm{Im}\boldsymbol{Y}_n^z - B_e = -0.289 \ \ \mathrm{S}$$

$$T_S = -\sqrt{3}\,\mathrm{Re}\boldsymbol{Y}_n^z + \mathrm{Im}\boldsymbol{Y}_n^z - B_e = 0.289 \ \ \mathrm{S}$$

$$T_T = \sqrt{3}\,\mathrm{Re}\boldsymbol{Y}_n^z + \mathrm{Im}\boldsymbol{Y}_n^z - B_e = 0.50 \ \ \mathrm{S}.$$

$$\boldsymbol{Y}_u^{'n} = \boldsymbol{Y}_u^{z*} + \boldsymbol{Y}_u^n = (0.061 + j\,0.228)^* - 0.228 - j\,0.061 = -0.167 - j\,0.289 \ \ \mathrm{S}$$

Compensator of negative sequence unbalanced current

$$T_{RS} = (\sqrt{3}\,\mathrm{Re}\boldsymbol{Y}_u^{'n} - \mathrm{Im}\boldsymbol{Y}_u^{'n})/3 = 0$$

$$T_{ST} = (2\,\mathrm{Im}\boldsymbol{Y}_u^{'n})/3 = -0.192 \ \mathrm{S}$$

$$T_{TR} = (-\sqrt{3}\,\mathrm{Re}\boldsymbol{Y}_u^{'n} - \mathrm{Im}\boldsymbol{Y}_u^{'n})/3 = 0.192 \ \mathrm{S}.$$

$+ \|\boldsymbol{i}_g\|^2$

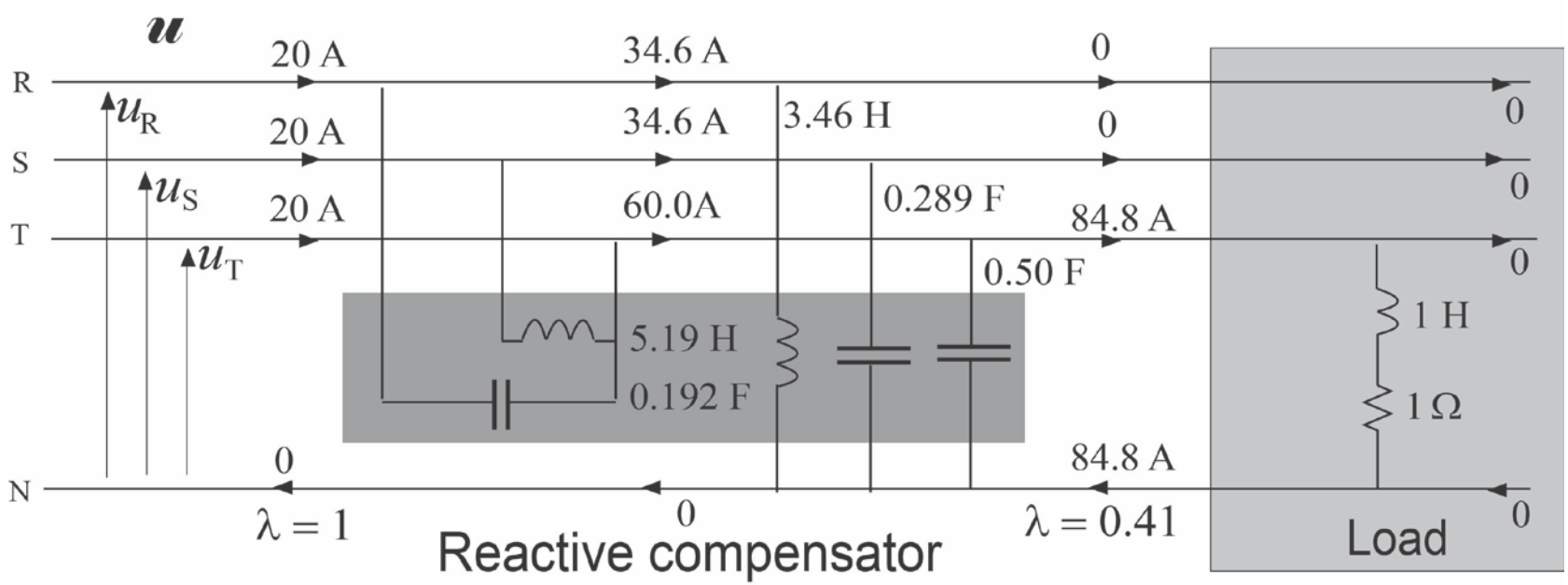

CPC
of three-phase Harmonics Generating Loads (HGL)
supplied by a four-wire line
with nonsinusoidal and asymmetrical voltages:

$$\boldsymbol{i}(t) = \boldsymbol{i}_{\mathrm{Ca}}(t) + \boldsymbol{i}_{\mathrm{Cr}}(t) + \boldsymbol{i}_{\mathrm{Cs}}(t) + \boldsymbol{i}^{\mathrm{n}}_{\mathrm{Cu}}(t) + \boldsymbol{i}^{\mathrm{p}}_{\mathrm{Cu}}(t) + \boldsymbol{i}^{\mathrm{z}}_{\mathrm{Cu}}(t) + \boldsymbol{i}_{\mathrm{G}}(t)$$

These currents are associated
with distinctive physical phenomena in the load

All of them
are mutually orthogonal
so that their three-phase RMS value
satisfy the relationship

$$||\boldsymbol{i}||^2 = ||\boldsymbol{i}_{\mathrm{Ca}}||^2 + ||\boldsymbol{i}_{\mathrm{Cr}}||^2 + ||\boldsymbol{i}_{\mathrm{Cs}}||^2 + ||\boldsymbol{i}^{\mathrm{n}}_{\mathrm{Cu}}||^2 + ||\boldsymbol{i}^{\mathrm{p}}_{\mathrm{Cu}}||^2 + ||\boldsymbol{i}^{\mathrm{z}}_{\mathrm{Cu}}||^2 + ||\boldsymbol{i}_{\mathrm{G}}||^2$$

Various approaches to the Power Theory development

Two main approaches to the power theory development:

- Frequency-domain
- Time-domain

have competed for the whole period of its development

Prof. Budeanu (1927),
suggesting the reactive power definition:

$$Q_{\mathrm{B}} \overset{\mathrm{df}}{=} \sum_{n=1}^{\infty} U_n I_n \sin\varphi_n$$

attampted to develop the power theory
in the frequency-domain

Prof. Fryze (1931)
suggested that power theory
should be developed
without use of the concept of harmonics

Fryze's circuit:

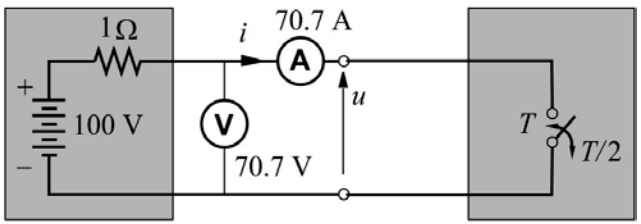

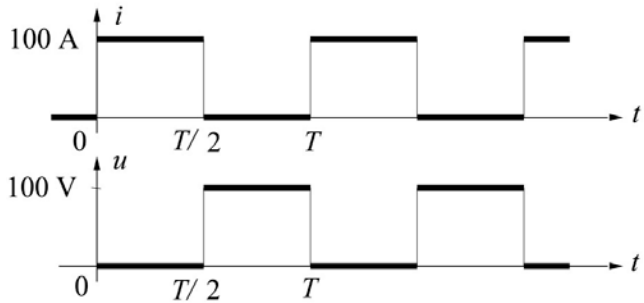

Frequency-domain:

$$u(t) = U_0 + \sqrt{2}\sum_{n=1}^{\infty} U_n \cos(n\omega_1 t + \alpha_n) = \sum_{n=0}^{\infty} u_n$$

$$i(t) = I_0 + \sqrt{2}\sum_{n=1}^{\infty} I_n \cos(n\omega_1 t + \beta_n) = \sum_{n=0}^{\infty} i_n.$$

$$p(t) = \frac{dW}{dt} = u(t)\, i(t) = \sum_{r=0}^{\infty} u_r \sum_{s=0}^{\infty} i_s = \sum_{n=0}^{\infty} S_n \cos(n\omega_1 t + \psi_n) = ?$$

Time-domain:

$$p(t) = \frac{dW}{dt} = u(t)\, i(t) = 0$$

was the main Fryze's argument against the frequency-domain

The Currents' Physical Components (CPC) – Power Theory,
which is currently

the most advanced concept of the power theory of electrical systems

was formulated

in the frequency-domain

There is also a dabate on,
should the power theory be developed
based on

- instantaneous approach
or
- averaged approach

?

The Instantaneous Reactive Power p-q Theory,
developed
by Akagi, Nabae, Kanazawa

is the main example of the instantaneous approach

Circuit #1

$$u_R = \sqrt{2}\,U\cos\omega t, \quad U = 220\text{ V}$$

$$i_R = \sqrt{2}\,I\cos(\omega t + 30^0), \quad I = 95.3\text{ A}$$

$$Q = 0$$

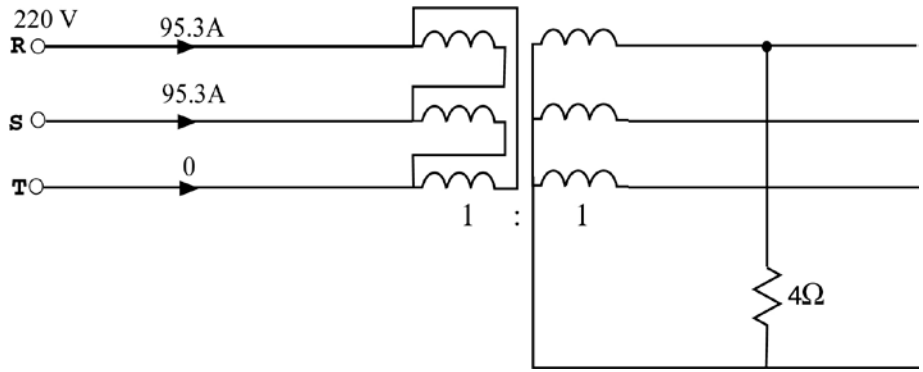

$$\begin{bmatrix} u_\alpha \\ u_\beta \end{bmatrix} = C\begin{bmatrix} u_R \\ u_S \end{bmatrix} = \begin{bmatrix} \sqrt{3}\,U\cos\omega t \\ \sqrt{3}\,U\sin\omega t \end{bmatrix}$$

$$\begin{bmatrix} i_\alpha \\ i_\beta \end{bmatrix} = C\begin{bmatrix} i_R \\ -i_R \end{bmatrix} = \begin{bmatrix} \sqrt{3}\,I\cos(\omega t + 30^o) \\ -I\cos(\omega t + 30^o) \end{bmatrix}$$

Instantaneous powers,

Active: $p = u_\alpha i_\alpha + u_\beta i_\beta = \sqrt{3}\,U\,I\,[1 + \cos 2(\omega t + 30^0)]$

Reactive: $q = u_\alpha i_\beta - u_\beta i_\alpha = -\sqrt{3}\,U\,I\sin 2(\omega t + 30^0)$

For $2(\omega t + 30^0) = 90^0, \quad p = -q$

Circuit #2

$$u_R = \sqrt{2}\,U\cos\omega t, \quad U = 220\ \text{V}$$

$$i_R = \sqrt{2}\,I\cos(\omega t - 60^0), \quad I = 95.3\ \text{A}$$

$P = 0$

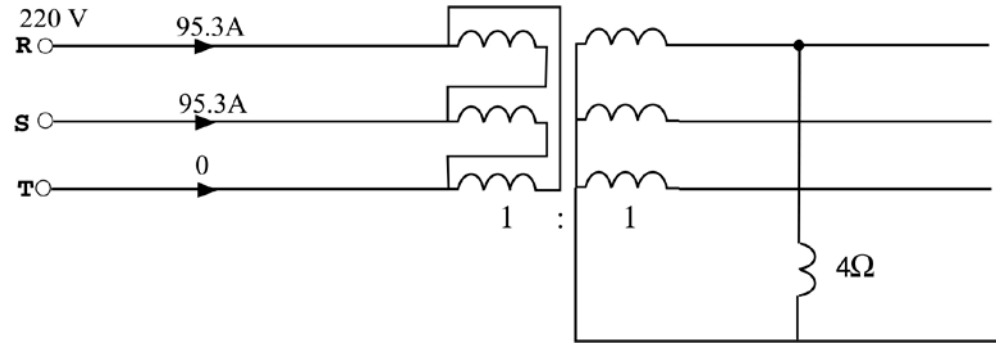

$$\begin{bmatrix} i_\alpha \\ i_\beta \end{bmatrix} = C \begin{bmatrix} i_R \\ -i_R \end{bmatrix} = \begin{bmatrix} \sqrt{3}\,I\cos(\omega t - 60^o) \\ -I\cos(\omega t - 60^o) \end{bmatrix}$$

Instantaneous powers,

Active: $p = u_\alpha i_\alpha + u_\beta i_\beta = \sqrt{3}\,U\,I\,[\cos(2\omega t - 30^0)]$

Reactive: $q = u_\alpha i_\beta - u_\beta i_\alpha = -\sqrt{3}\,U\,I\,[1 + \sin(2\omega t - 30^0)]$

For $2\omega t - 30^0 = 0, \quad p = -q$

Circuit #3

$$u_R = \sqrt{2}\,U\cos\omega t, \quad U = 220\ \text{V}$$

$$i_R = \sqrt{2}\,I\cos(\omega t - 60^0), \quad I = 190.5\ \text{A}$$

$$i_S = \sqrt{2}\,I\cos(\omega t + 60^0)$$

$P = 0, \quad Q = 0$

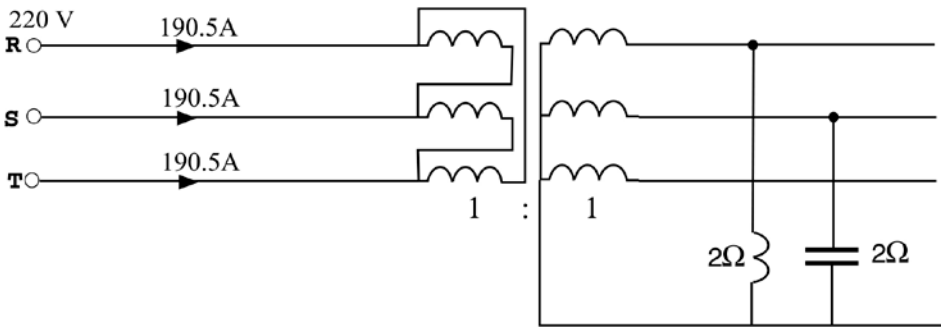

$$\begin{bmatrix} i_\alpha \\ i_\beta \end{bmatrix} = C \begin{bmatrix} i_R \\ i_S \end{bmatrix} = \begin{bmatrix} \sqrt{3}\,I\cos(\omega t - 60^o) \\ -\sqrt{3}\,I\sin(\omega t - 60^o) \end{bmatrix}$$

Instantaneous powers,

Active: $p = u_\alpha i_\alpha + u_\beta i_\beta = 3UI\cos(2\omega t - 60^0)$

Reactive: $q = u_\alpha i_\beta - u_\beta i_\alpha = -3UI\sin(2\omega t - 60^0)$

For $2\omega t - 60^0 = 45^0, \quad p = -q$

There are instants of time with identical pairs
of instantaneous powers *p* and *q*

$$p = -q$$

for entirely different loads

Power properties of the load
cannot be identified instantaneously

L.S. Czarnecki, “On some misinterpretations of the Instantaneous Reactive Power p-q Theory,” IEEE Trans. on Power Electronics, Vol. 19, No.3, pp. 828-836, 2004**.**

L.S. Czarnecki, "Comparison of the Instantaneous Reactive Power, p-q, Theory with Theory of Current’s Physical Components," *Archiv fur Elektrotechnik*, Vol. 85, No. 1, Feb. 2004, pp. 21-28.

Let us have a pair of instantaneous values
of voltages and currents

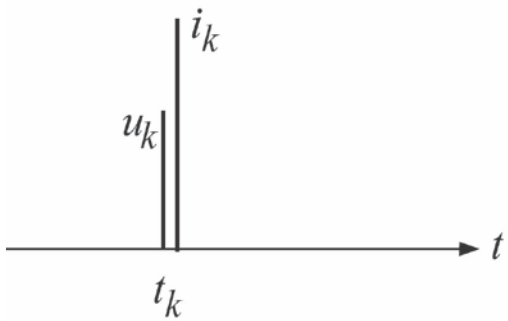

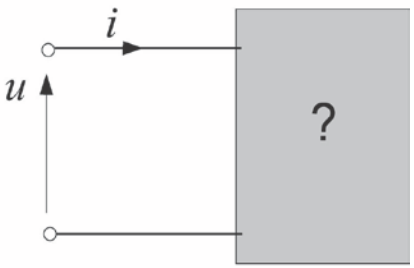

Question:

What it is in the box: resistor, inductor or capacitor?

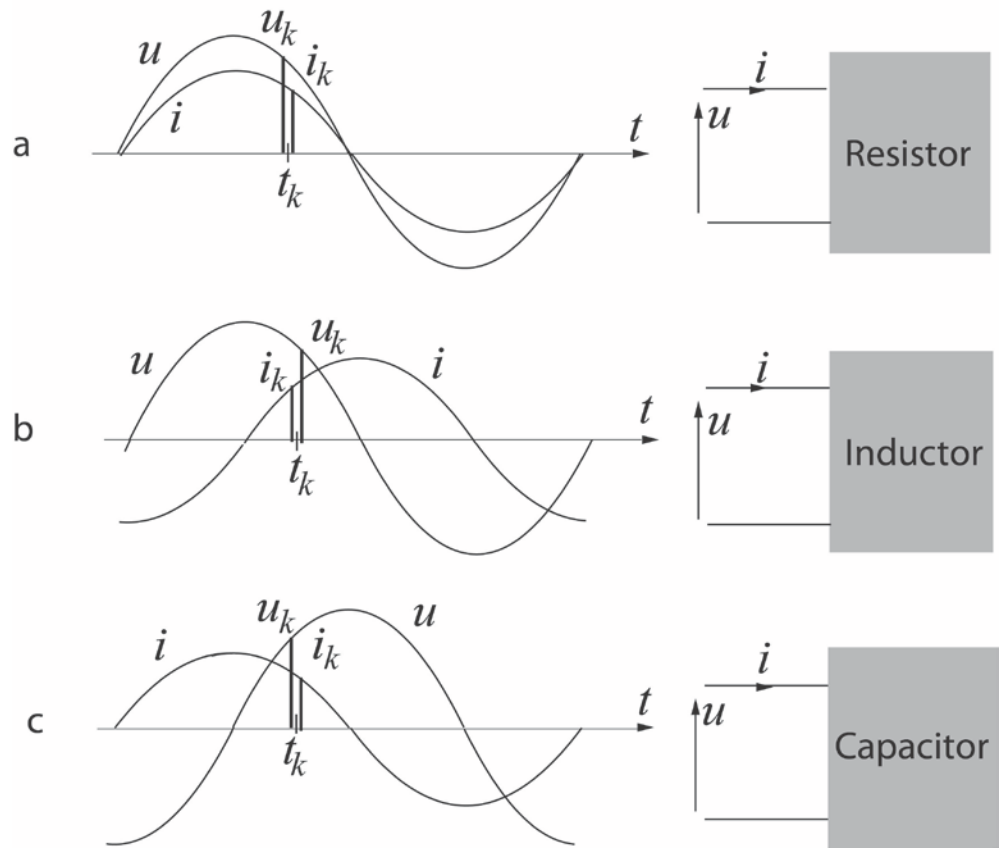

A pair of instantaneous values of voltages and current does not enable us to determine the load properties

To determine the load properties, these pairs have to be observed for the whole period *T*

Instantaneous approach does not provide
right fundamentals
for the power theory development

Therefore,
the CPC – based Power Theory was formulated on
an averaging approach

Compensation

The CPC-based Power Theory
is the only theory
that provides fundamentals for reactive compensator synthesis
(as demonstrated previously)

as well as
it enables control
of switching compensators, known as “active power filters”

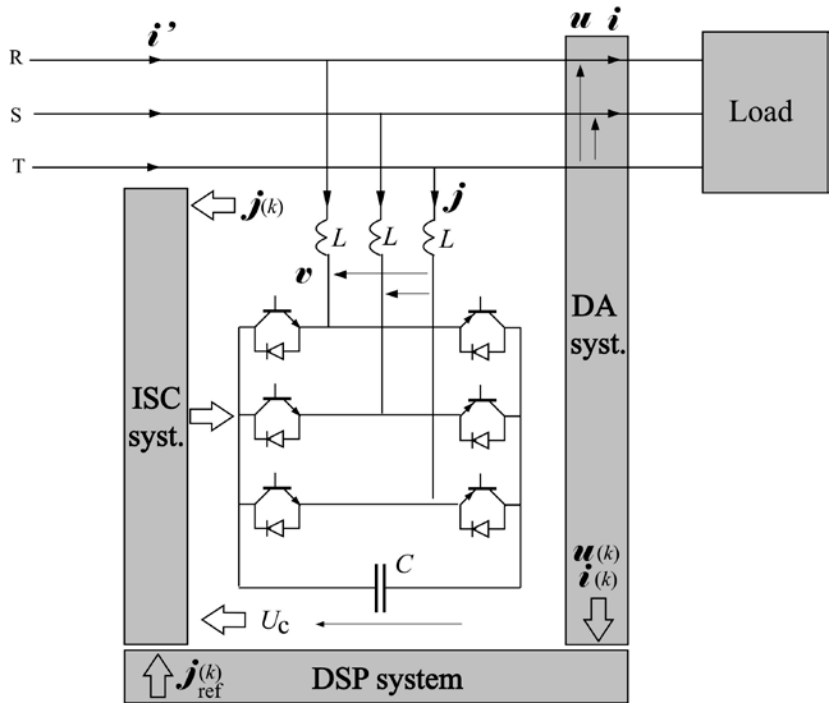

The CPC-based Power Theory
is the only theory
that provides fundamentals for reactive compensator synthesis

because
the current physical components are expressed in the CPC
in terms of the load parameters

it enables control of switching compensators

because
each component of the load current, other than the active one

$$\boldsymbol{i}_{\mathrm{Cr}},\ \boldsymbol{i}_{\mathrm{Cs}},\ \boldsymbol{i}_{\mathrm{Cu}}^{\mathrm{n}},\ \boldsymbol{i}_{\mathrm{Cu}}^{\mathrm{p}},\ \boldsymbol{i}_{\mathrm{Cu}}^{\mathrm{z}},\ \boldsymbol{i}_{\mathrm{G}}$$

can be regarded as a reference signal for a compensator control

Harmful Current s' Physical Components:

$$\boldsymbol{i}_{\mathrm{Cr}},\ \boldsymbol{i}_{\mathrm{Cs}},\ \boldsymbol{i}_{\mathrm{Cu}}^{\mathrm{n}},\ \boldsymbol{i}_{\mathrm{Cu}}^{\mathrm{p}},\ \boldsymbol{i}_{\mathrm{Cu}}^{\mathrm{z}},\ \boldsymbol{i}_{\mathrm{G}}$$

can be
measured/calculated
from measurement of voltages and currents
at the load terminals.

They differ as to properties
and a compensator needed for their reduction

They can be compensated together or
individually
by hybrid compensators

Example of a low quality load

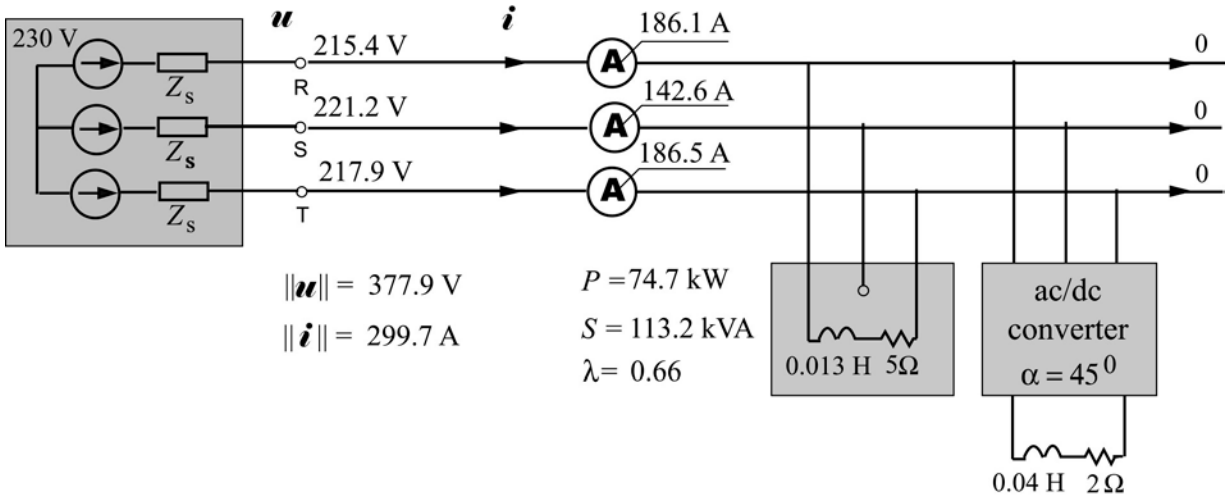

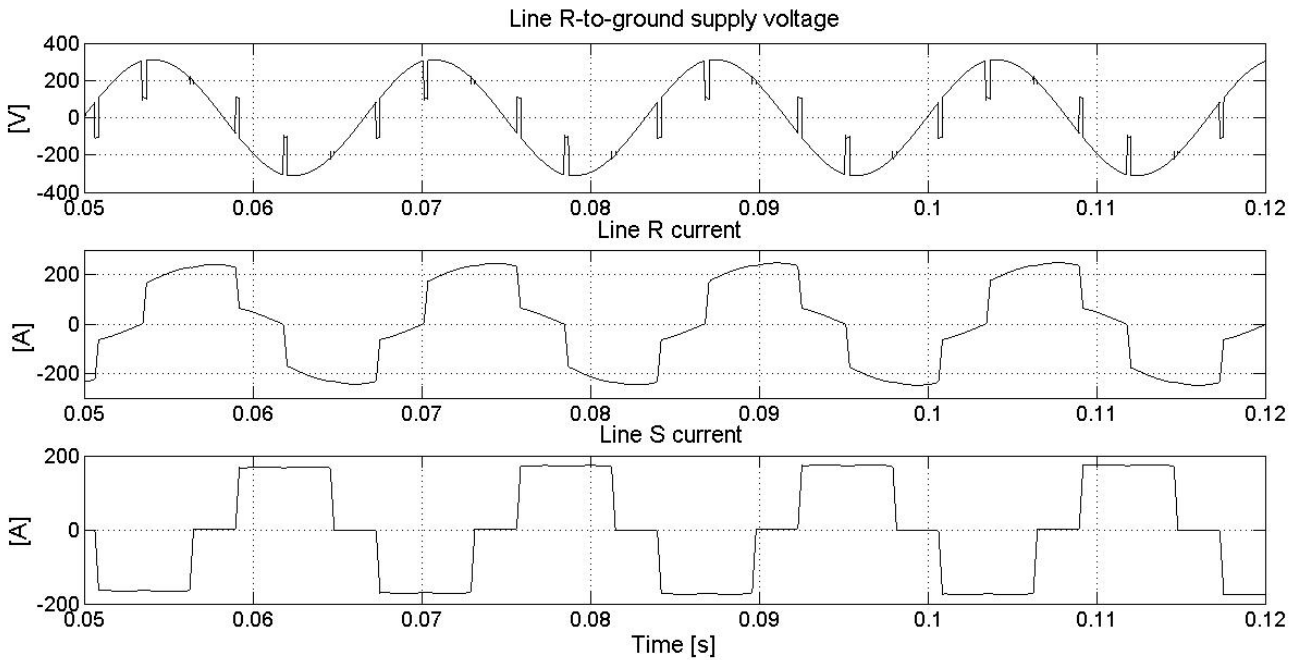

Switching compensator with CPC - based control

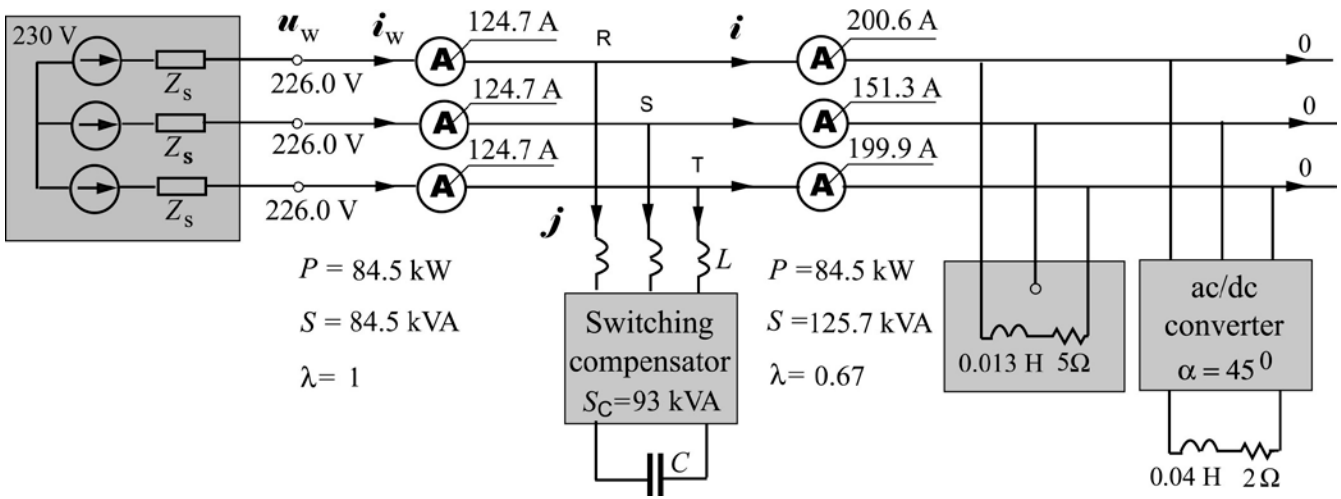

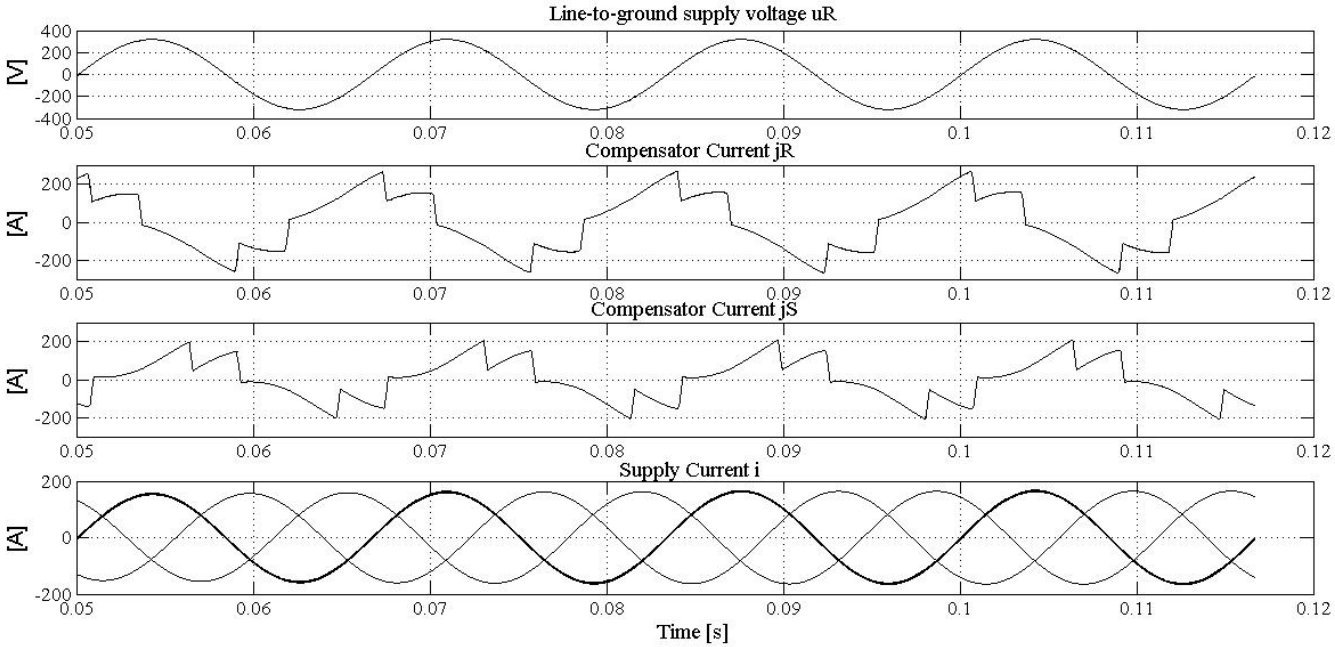

Hybrid switching compensator with CPC-based control

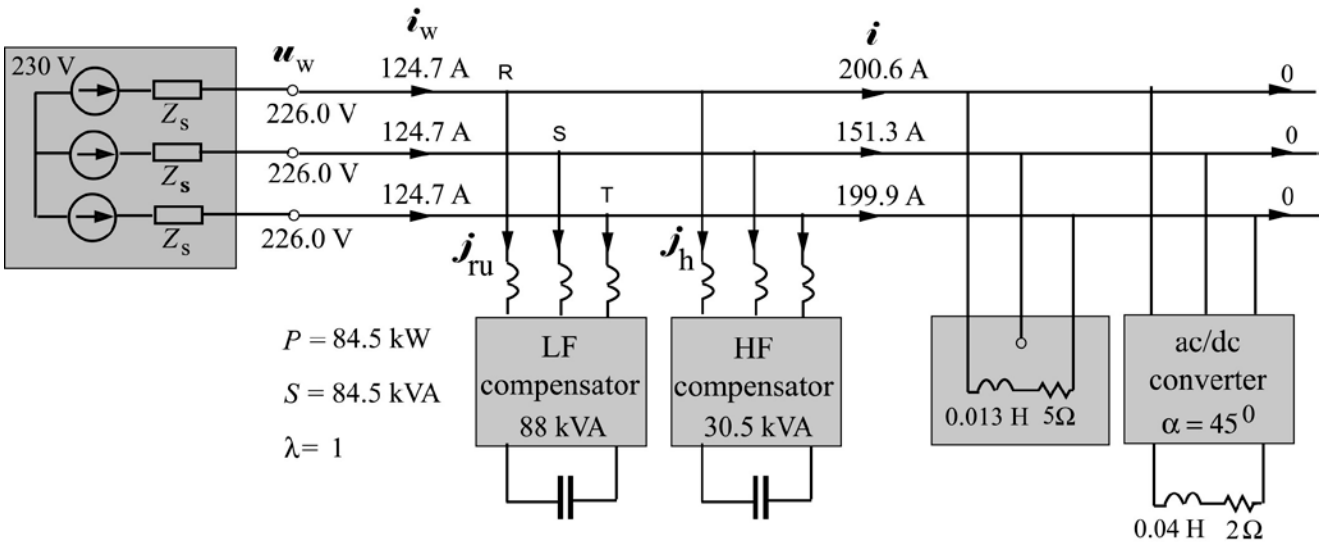

Compensation of the generated current i_G requires fast switching inverter, but of low power

Compensation of the reactive and unbalanced currents i_r and i_u requires high power switching inverter, but the switching frequency can be low.

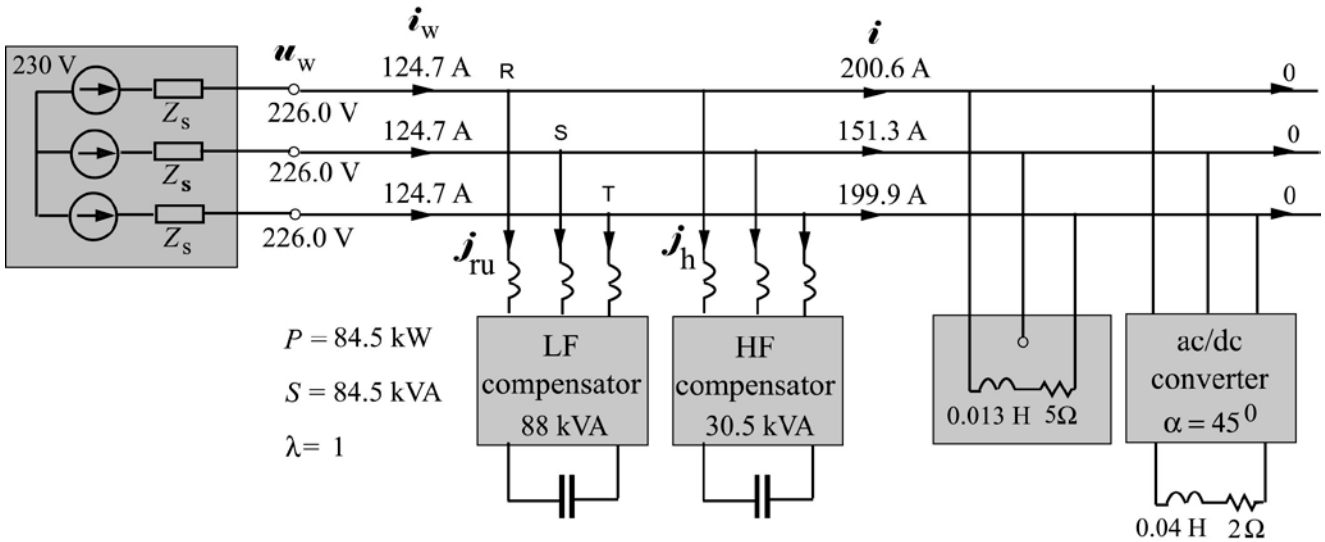
230 V
Z_s
Z_s
Z_s
u_w
226.0 V
226.0 V
226.0 V
i_w
124.7 A
124.7 A
124.7 A
R
S
T
i
200.6 A
151.3 A
199.9 A
0
0
0
j_{ru}
j_h
$P = 84.5$ kW
$S = 84.5$ kVA
$\lambda = 1$
LF compensator 88 kVA
HF compensator 30.5 kVA
0.013 H 5Ω
ac/dc converter $\alpha = 45^0$
0.04 H 2Ω

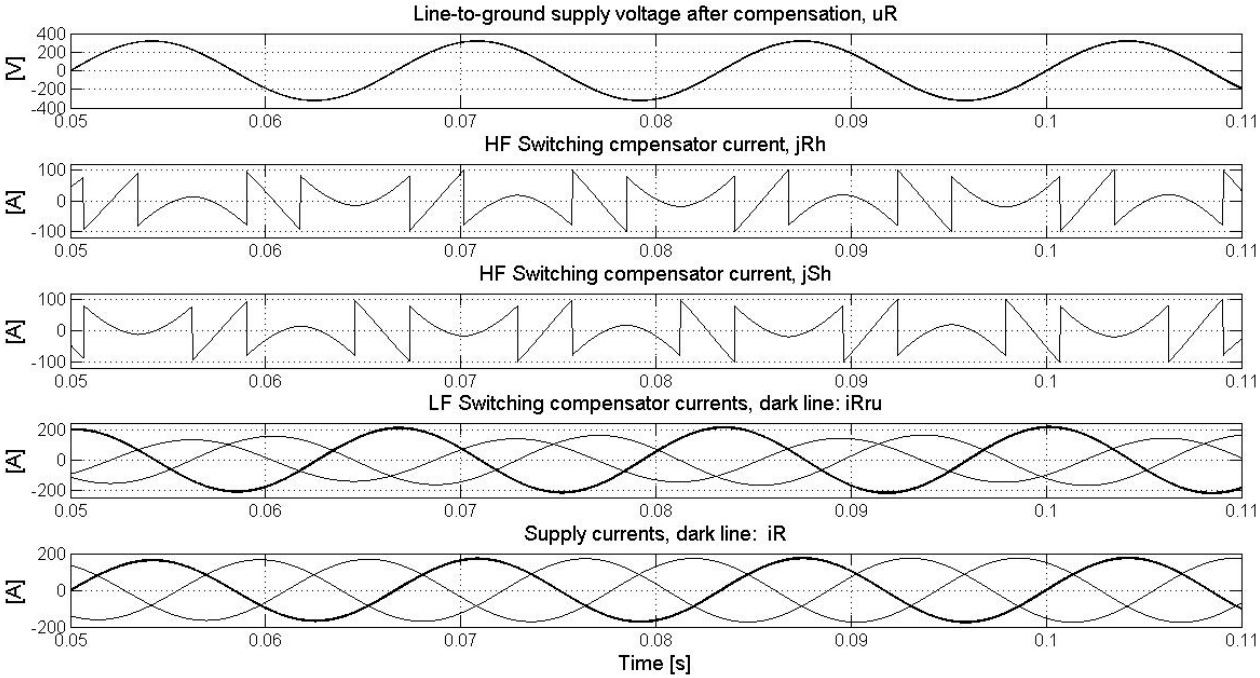
Line-to-ground supply voltage after compensation, uR
[V]
HF Switching cmpensator current, jRh
[A]
HF Switching compensator current, jSh
[A]
LF Switching compensator currents, dark line: iRru
[A]
Supply currents, dark line: iR
[A]
Time [s]

Loads with variable active power

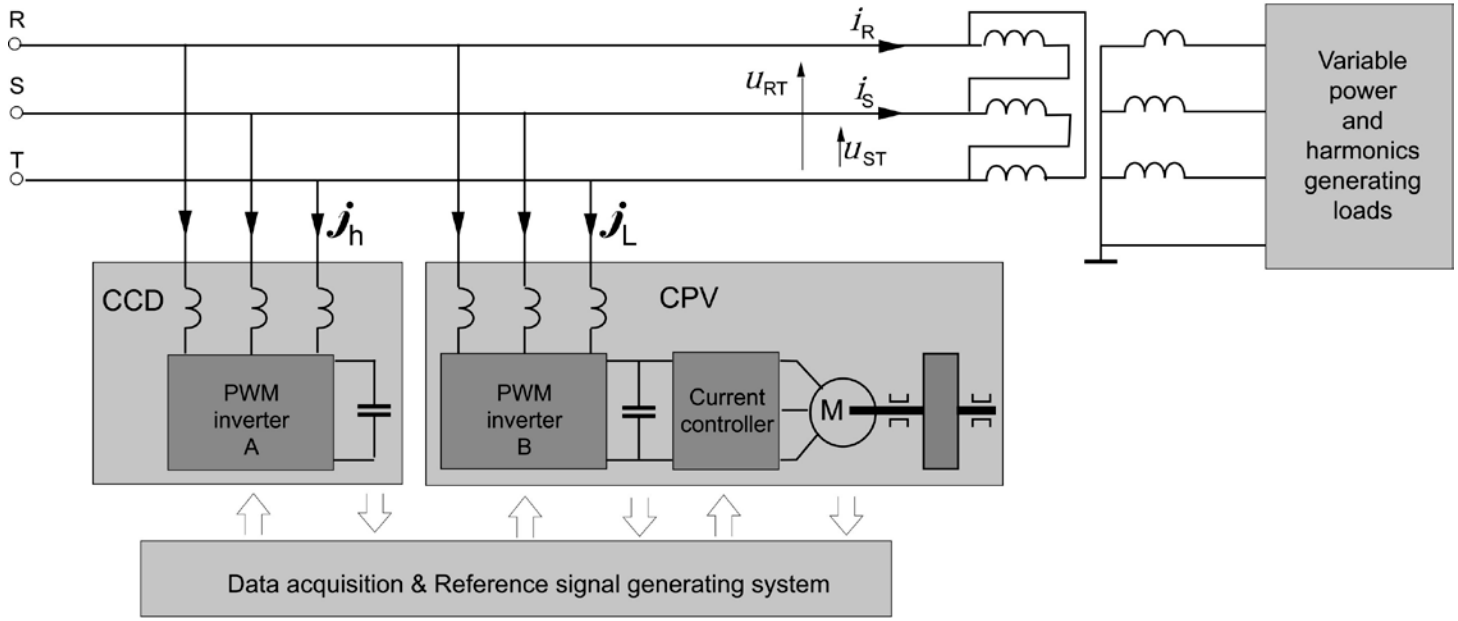

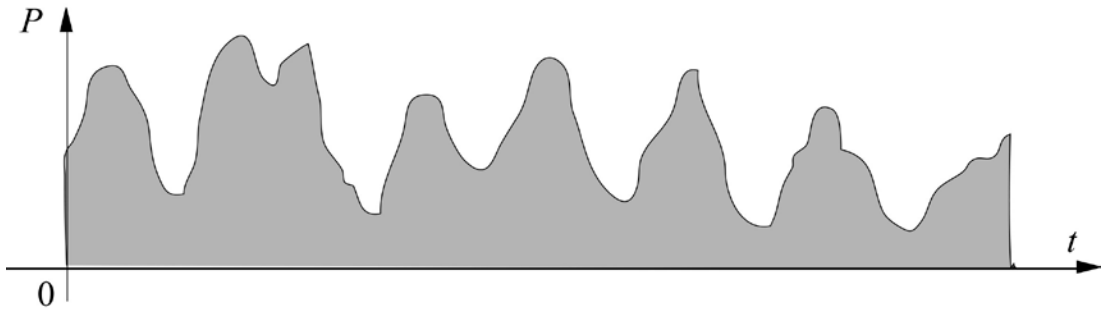

Loads with variable active power

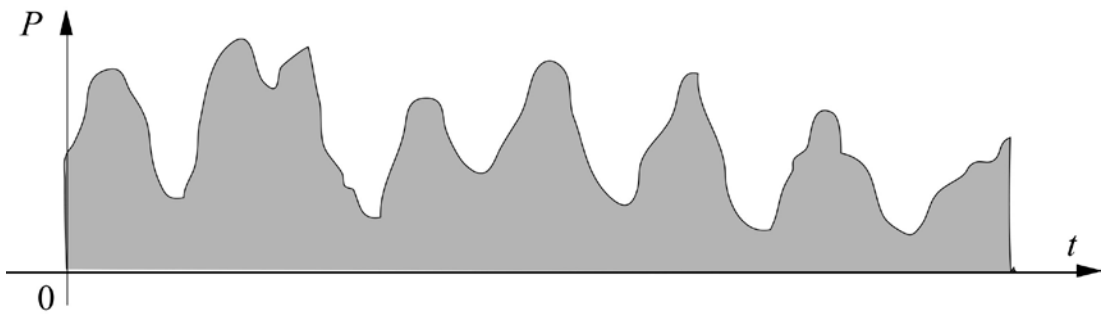

Compensation of a load with variable active power requires
a compensator with a sufficient energy storage,
but with low switching frequency

Compensation of the generated current
does not require such energy storage, but higher
switching frequency

Hybrid switching compensator with CPC-based control

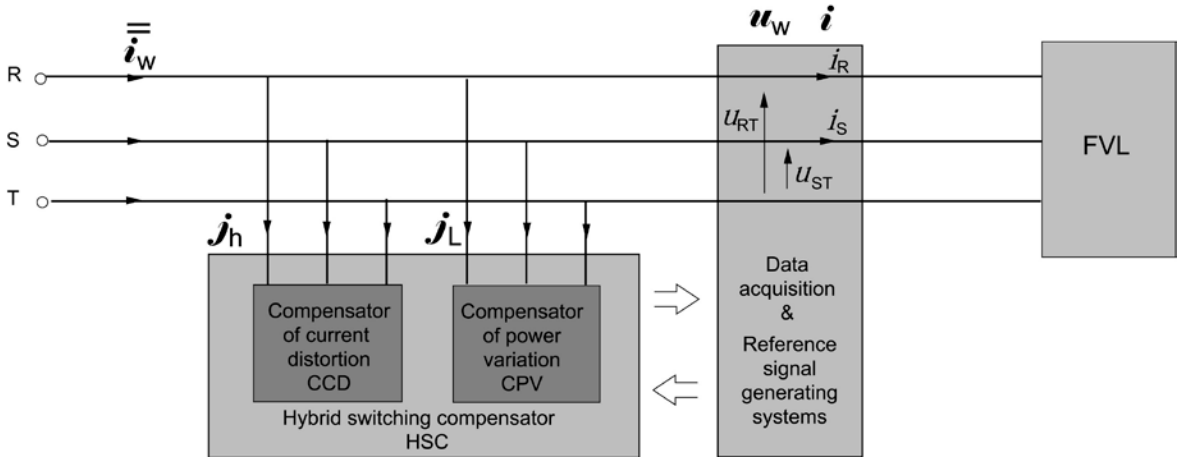

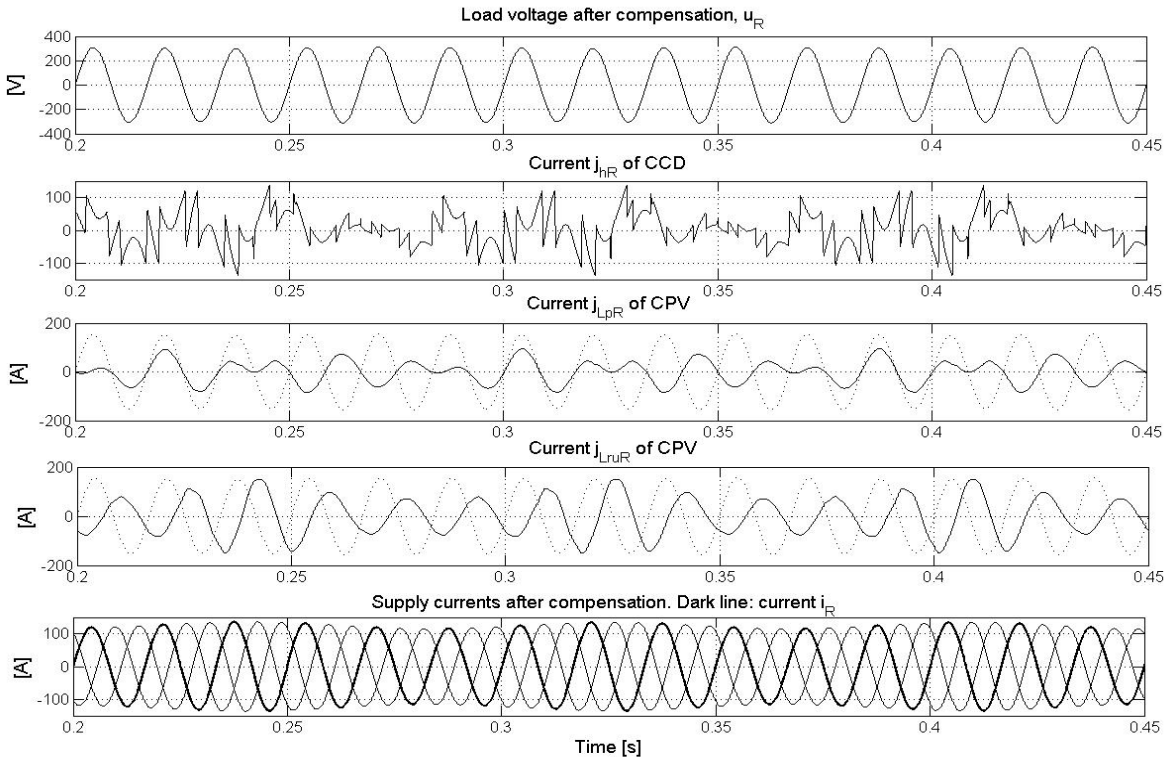

Such compensation of individual current components
is not possible when a compensator
is controlled using
Instantaneous Reactive power p-q theory

$$\begin{bmatrix} u_\alpha \\ u_\beta \end{bmatrix} = \begin{bmatrix} \sqrt{3/2}, & 0 \\ 1/\sqrt{2}, & \sqrt{2} \end{bmatrix} \begin{bmatrix} u_R \\ u_S \end{bmatrix} \qquad \begin{bmatrix} i_\alpha \\ i_\beta \end{bmatrix} = \begin{bmatrix} \sqrt{3/2}, & 0 \\ 1/\sqrt{2}, & \sqrt{2} \end{bmatrix} \begin{bmatrix} i_R \\ i_S \end{bmatrix}$$

$$p = u_\alpha i_\alpha + u_\beta i_\beta$$

$$q = u_\alpha i_\beta - u_\beta i_\alpha$$

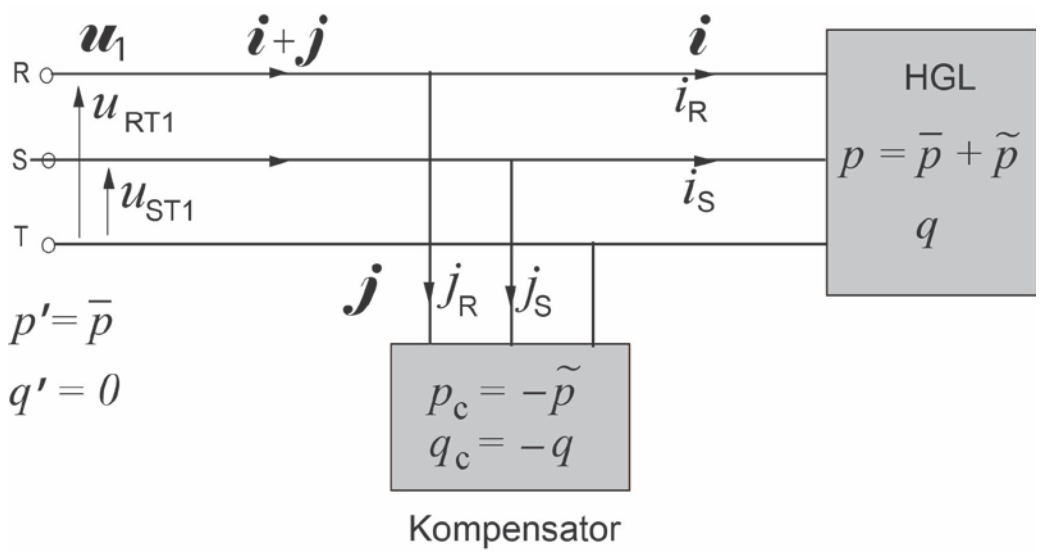

Moreover, IRP p-q Theory erroneously interprets power phenomena in electrical circuits

$$u_R = \sqrt{2}\, U_1 \cos \omega_1 t\,,$$

$$i_R = \sqrt{2}\, I_1 \cos \omega_1 t + \sqrt{2}\, I_7 \cos 7\omega_1 t$$

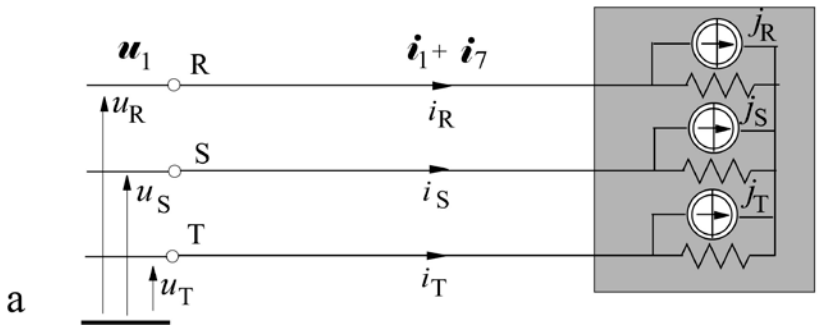

$$p = \overline{p} + \tilde{p} = 3U_1 I_1 + 3U_1 I_7 \cos 6\omega_1 t$$

$$q = 0$$

$$u_R = \sqrt{2}\, U_1 \cos \omega_1 t + \sqrt{2}\, U_7 \cos 7\omega_1 t$$

$$\boldsymbol{i} = G\, \boldsymbol{u}$$

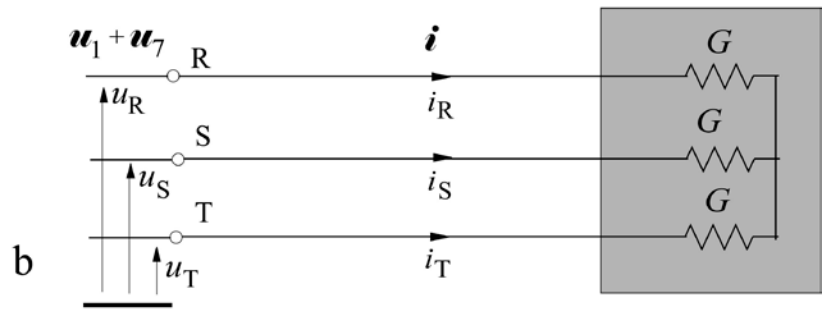

$$p = \overline{p} + \tilde{p} = P + 6GU_1U_7 \cos 6\omega_1$$

$$q = 0$$

These two circuits,
substantially different with respect to properties and needed compensation,
are identical in terms of IRP p-q Theory

L.S. Czarnecki, "Constraints of the Instantaneous Reactive Power p-q Theory", IET Power Electronics, Vol. 7, No. 9, pp.2201-2208, 2014.

Moreover, the conclusion
that after ideal compensation the instantaneous active power p
should be constant ,
misinterprets power properties of electrical systems

The instantaneous active power p
of an ideal load
supplied with distorted voltage
or
asymmetrical voltage
IS
NOT CONSTANT

Let the load is an ideal resistive load supplied with **nonsinusoidal** voltage

$$\boldsymbol{u} = \boldsymbol{u}_1 + \boldsymbol{u}_5$$

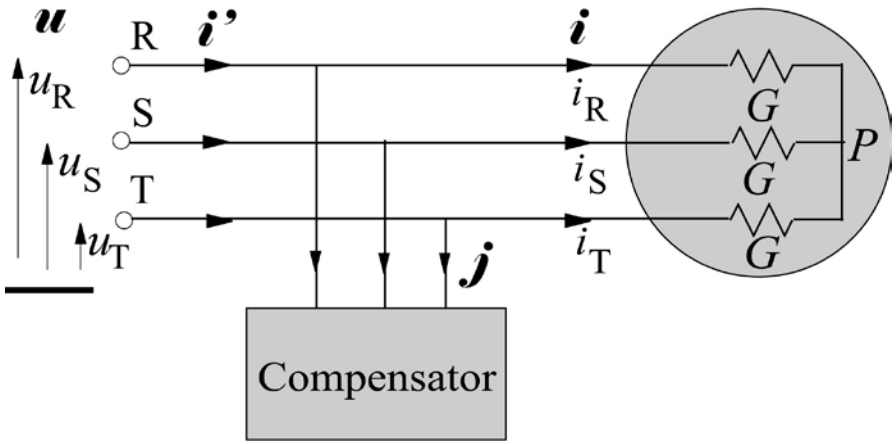

$$p = \overline{p} + \tilde{p} = P_1 + P_5 + 6GU_1U_5\cos 6\omega_1 t$$

$$j_R = \frac{-2\sqrt{2}\,GU_1U_5\cos 6\omega_1 t}{U_1^2 + U_5^2 + 2U_1U_5\cos 6\omega_1 t}\left(U_1\cos\omega_1 t + U_5\cos 5\omega_1 t\right)$$

L.S. Czarnecki, (2009) "Effect of supply voltage harmonics on IRP p-q-based switching compensator control," *IEEE Trans. on Power Electronics*, Vol. 24, No. 2

Let the load is an ideal resistive load supplied with **asymmetrical** voltage

$$\boldsymbol{u} = \boldsymbol{u}^{\mathrm{p}} + \boldsymbol{u}^{\mathrm{n}}$$

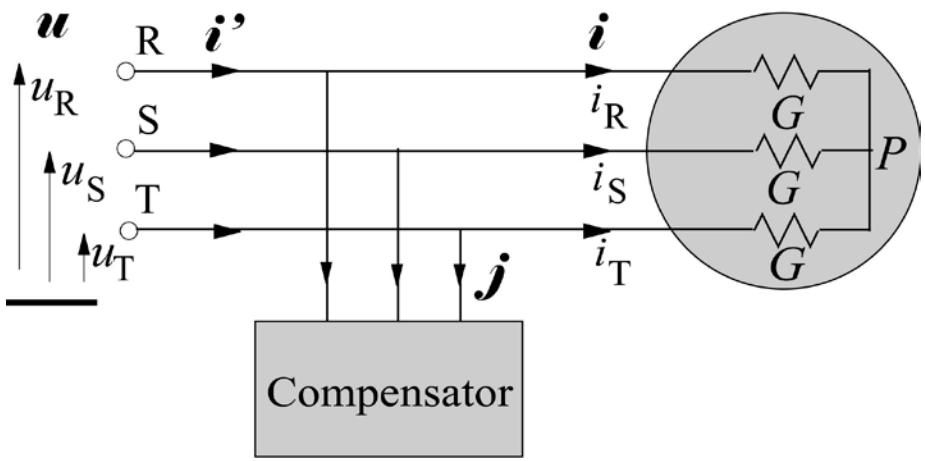

$$p = \overline{p} + \tilde{p} = P^{\mathrm{p}} + P^{\mathrm{n}} + 6GU^{\mathrm{p}}U^{\mathrm{n}}\cos 2\omega_1 t$$

$$j_{\mathrm{R}} = \sqrt{\frac{2}{3}}\, j_{\alpha} = \frac{-2\sqrt{2}\,G\,(U^{\mathrm{p}} + U^{\mathrm{n}})U^{\mathrm{p}}U^{\mathrm{n}}\cos\omega_1 t\cos 2\omega_1 t}{U^{\mathrm{p}2} + U^{\mathrm{n}2} + 2U^{\mathrm{p}}U^{\mathrm{n}}\cos 2\omega_1 t}$$

L.S. Czarnecki, "Effect of supply voltage asymmetry on IRP p-q - based switching compensator control," *IET Proc. on Power Electronics*, 2010, Vol. 3, No. 1

Development
of the Currents' Physical Components (CPC) – based Power Theory

was strongly correlated with evaluation of results

of other approaches
to this Theory development

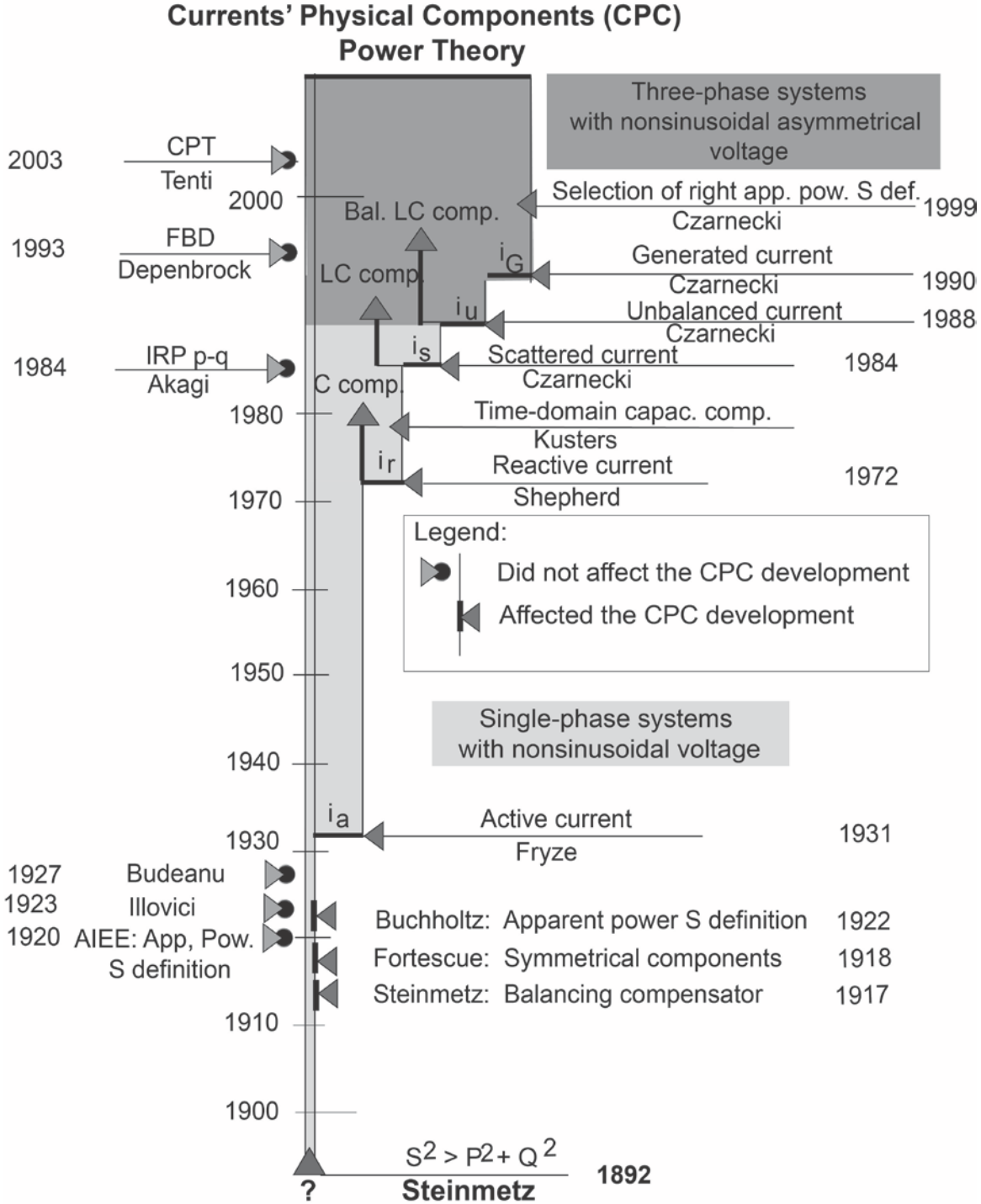
Currents' Physical Components (CPC)
Power Theory
Three-phase systems
with nonsinusoidal asymmetrical
voltage
2003
CPT
Tenti
2000
Bal. LC comp.
Selection of right app. pow. S def.
Czarnecki
1999
1993
FBD
Depenbrock
LC comp.
i_G
Generated current
Czarnecki
1990
i_u
Unbalanced current
Czarnecki
1988
1984
IRP p-q
Akagi
i_s
Scattered current
Czarnecki
1984
C comp.
1980
Time-domain capac. comp.
Kusters
i_r
Reactive current
Shepherd
1972
1970
Legend:
Did not affect the CPC development
Affected the CPC development
1960
1950
Single-phase systems
with nonsinusoidal voltage
1940
i_a
Active current
Fryze
1931
1930
1927
Budeanu
1923
Illovici
1920
AIEE: App, Pow.
S definition
Buchholtz: Apparent power S definition
1922
Fortescue: Symmetrical components
1918
Steinmetz: Balancing compensator
1917
1910
1900
$S^2 > P^2 + Q^2$
?
Steinmetz
1892

Overview
of other Power Theories

Critical Comments on the Budeanu's Power Theory

L.S. Czarnecki, "What is wrong with the Budeanu concept of reactive and distortion powers and why it should be abandoned," *IEEE Trans. Instr. Meas.,* Vol. IM-36, No. 3, Sept. 1987.

L.S. Czarnecki, "Budeanu and Fryze: Two frameworks for interpreting power properties of circuits with nonsinusoidal voltages and currents," *Archiv fur Elektrotechnik*, (81), N. 2, 1997.

1927

C.I. Budeanu, Professor of Bucharest University, Romania, introduced definition of the reactive power

$$Q = Q_{\mathrm{B}} = \sum_{n=1}^{\infty} U_n I_n \sin\varphi_n$$

$$P^2 + Q_{\mathrm{B}}^2 \leq S^2$$

Budeanu concluded that there is also other power associated with the waveform distortion, and introduced a new power quantity, called

Distortion Power

$$D = \sqrt{S^2 - (P^2 + Q_{\mathrm{B}}^2)}$$

Budeanu's power equation has the form:

$$S^2 = P^2 + Q_{\mathrm{B}}^2 + D^2$$

1987

L.S. Czarnecki: What is Wrong With the Budeanu's Concept of Reactive and Distortion Powers and Why it Should be Abandoned,

IEEE Trans. on Instrumentation and Measurements

Why Budeanu's definition of reactive power is wrong?

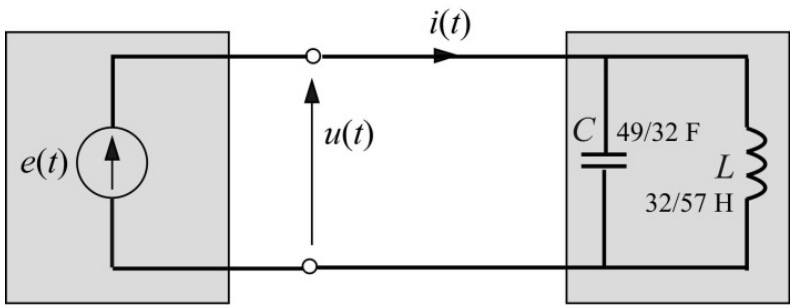

$$u(t) = \sqrt{2}(100\sin\omega_1 t + 25\sin 3\omega_1 t)\ \mathrm{V}$$

$$i(t) = \sqrt{2}\,[25\sin(\omega_1 t - 90^0) + 100\sin(3\omega_1 t + 90^0)]\ \mathrm{A}$$

$$p(t) = \frac{dW(t)}{dt} = u(t)\,i(t)$$

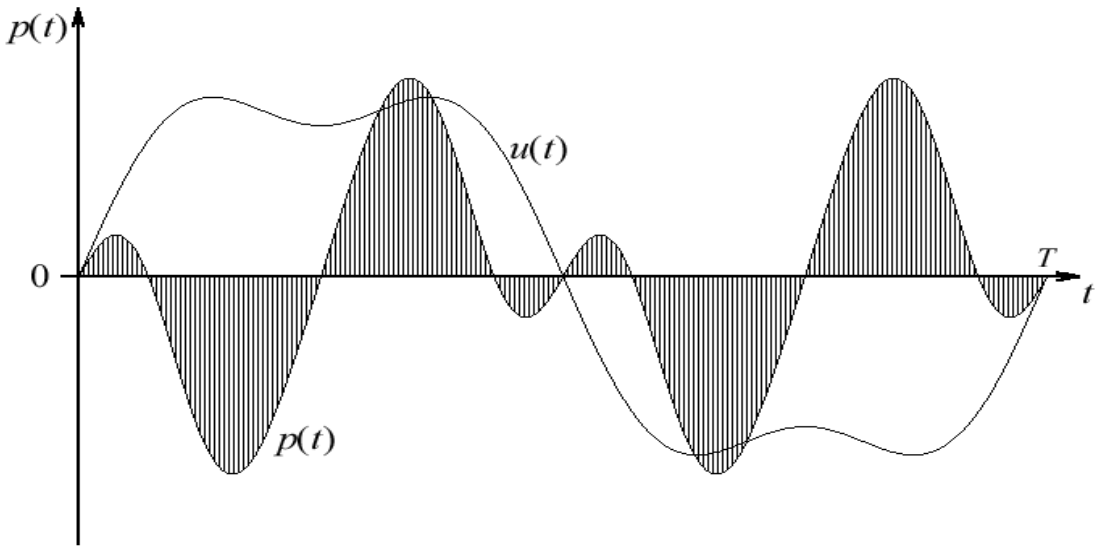

$$Q_B = \sum_{n=1}^{\infty} U_n I_n \sin\varphi_n = 100\times 25 + 25\times 100\times(-1) = 0$$

There are energy oscillations in spite of zero Budeanu's reactive power Q_B

Why Budeanu's definition of Distortion power D is wrong?

$$D = \sqrt{S^2 - P^2 - Q_B^2} = \sqrt{\frac{1}{2}\sum_{r\in N}\sum_{s\in N} U_r^2 U_s^2 \,|\boldsymbol{Y}_r - \boldsymbol{Y}_s|^2}$$

$D = 0$ if for each r, s:

$$\boldsymbol{Y}_r = \boldsymbol{Y}_s \text{.....(1)}$$

$$u(t) = \sqrt{2}(100\sin\omega_1 t + 50\sin 3\omega_1 t)\ \mathrm{V}$$

$$i(t) = \sqrt{2}\,[100\sin(\omega_1 t + \frac{\pi}{2}) + 50\sin(3\omega_1 t + \frac{\pi}{2})]$$

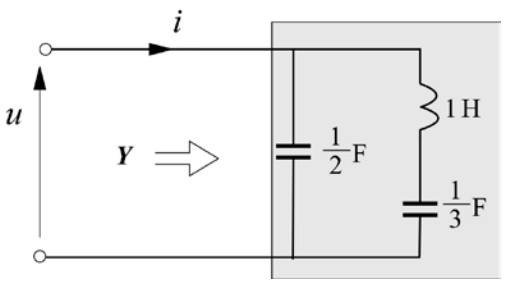

$$\boldsymbol{Y}_1 = \boldsymbol{Y}_3 = 1\,e^{j\frac{\pi}{2}}\ \mathrm{S}$$

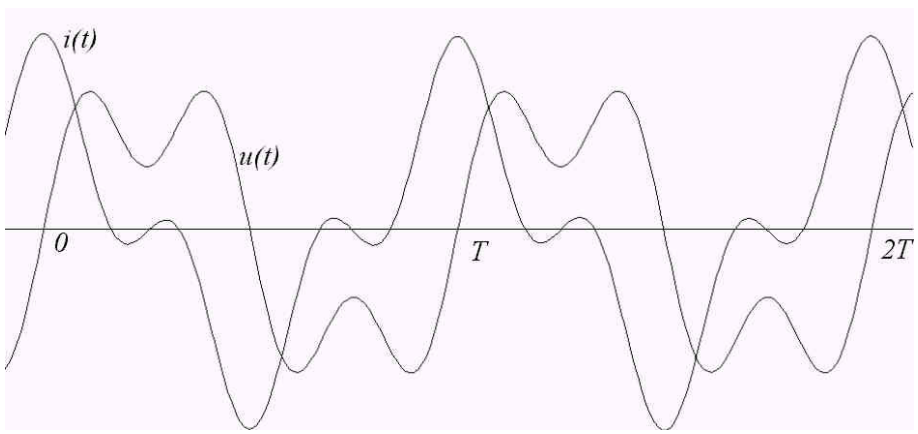

The load current is distorted in spite of zero distortion power D

The load current is not distorted, meaning

$$i(t) = a\,u(t-\tau)$$

if $\quad \boldsymbol{I}_n = a\boldsymbol{U}_n e^{-jn\tau} = \boldsymbol{Y}_n \boldsymbol{U}_n,$

$$\boldsymbol{Y}_n = a\,e^{-jn\tau} \quad \text{.....(2)}$$

$$u(t) = \sqrt{2}(100\sin\omega_1 t + 30\sin 3\omega_1 t)\ \text{V}$$

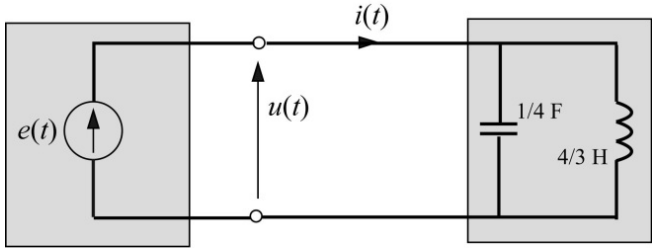

$$\boldsymbol{Y}_1 = j\frac{1}{4} - j\frac{3}{4} = \frac{1}{2}e^{-j\frac{\pi}{2}}\ \text{S}$$

$$\boldsymbol{Y}_3 = j\frac{3}{4} - j\frac{1}{4} = \frac{1}{2}e^{-j3\frac{\pi}{2}}\ \text{S}$$

$$i(t) = \sqrt{2}[50\sin(\omega_1 t - \frac{\pi}{2}) + 15\sin(3\omega_1 t - \frac{3\pi}{2}) = \frac{1}{2}u(t - \frac{T}{4})\ \text{A},$$

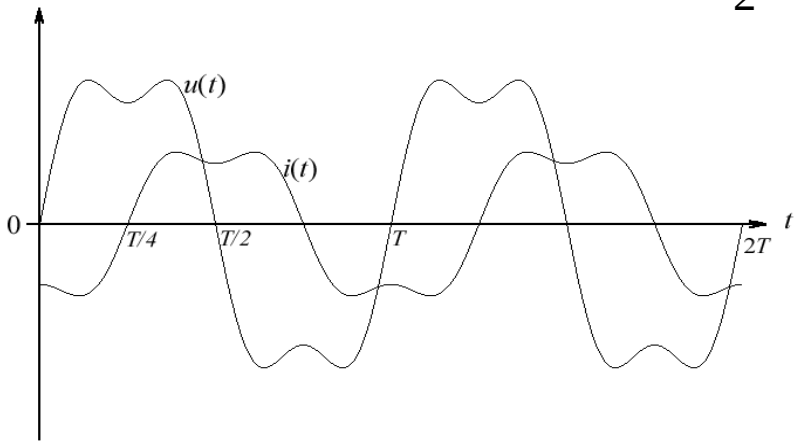

$$D = U_1 U_3 |\boldsymbol{Y}_1 - \boldsymbol{Y}_3| = 2.5\ \text{kVA}$$

The load current is not distorted in spite of non zero distortion power D

Power factor improvement and Budeanu's reactive power

$$u(t) = \sqrt{2}(100\sin\omega_1 t + 25\sin 3\omega_1 t)\ \mathrm{V}$$

$$i(t) = \sqrt{2}\,[25\sin(\omega_1 t - 90^0) + 100\sin(3\omega_1 t + 90^0)]\ \mathrm{A}$$

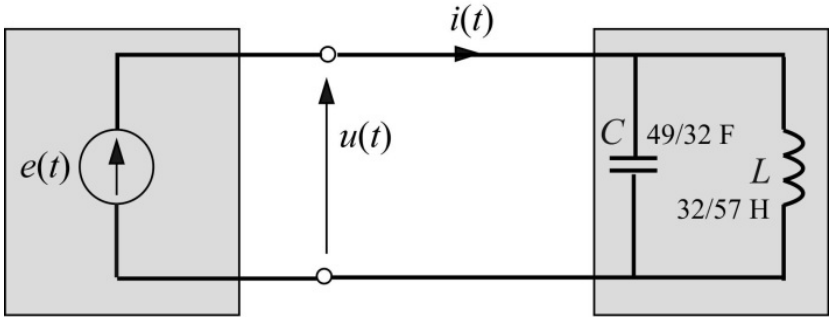

$$Q_{\mathrm{B}} = \sum_{n=1}^{\infty} U_n I_n \sin\varphi_n = 100\times 25\times 1 + 25\times 100\times(-1) = 0$$

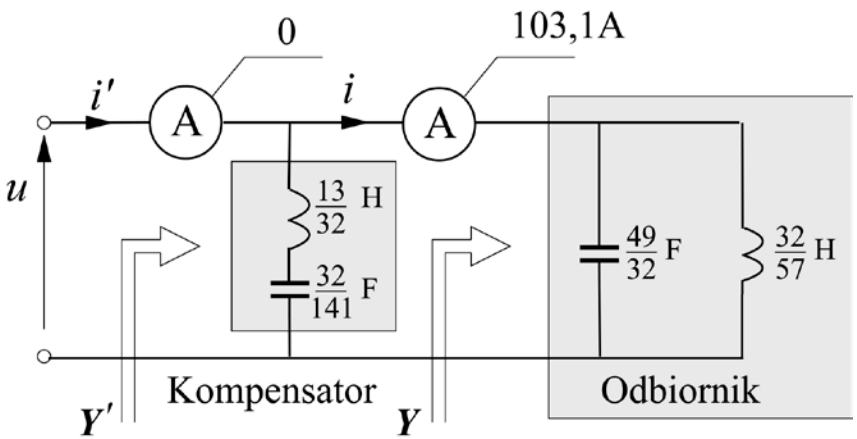

Budeanu's reactive power is useless for compensator design

1931

S. Fryze, Professor of Lwow University, Poland, defined the reactive power in a time-domain, based on

the load current orthogonal decomposition into active and reactive currents

$$i = i_{\mathrm{a}} + i_{\mathrm{rF}}$$

$$i_{\mathrm{a}}(t) = \frac{P}{\|u\|^2} u(t) = G_{\mathrm{e}}\, u(t), \qquad i_{\mathrm{rF}}(t) = i(t) - i_{\mathrm{a}}(t)$$

$$\frac{1}{T}\int_0^T i_{\mathrm{a}}(t)\, i_{\mathrm{rF}}(t)\, dt = (i_{\mathrm{a}}, i_{\mathrm{rF}}) = 0$$

$$\|i\|^2 = \|i_{\mathrm{a}}\|^2 + \|i_{\mathrm{rF}}\|^2$$

Fryze's power equation: $S^2 = P^2 + Q_{\mathrm{F}}^2$

Fryze's definition of reactive power: $Q_{\mathrm{F}} = \|u\|\,\|i_{\mathrm{rF}}\|$

Question: Does the Fryze's Power Theory provide fundamentals for the power factor improvement?

$$u(t) = 100\sqrt{2}\,(\sin\omega_1 t + \sin 3\omega_1 t)\ \text{V}$$

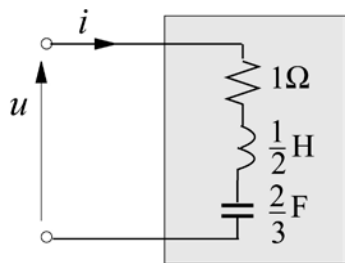

$P = 10$ kW

$Q = 10$ kVAr

$S = 14.1$ kVA

$\lambda = 0.71$

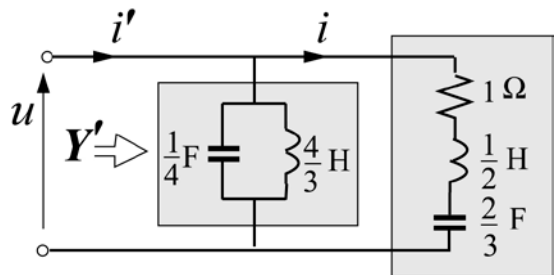

$Q = 0$

$S = 10$ kVA

$\lambda = 1$

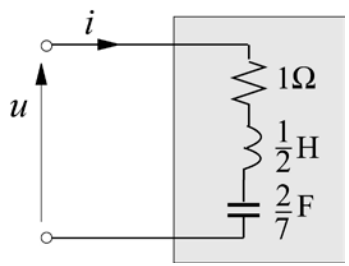

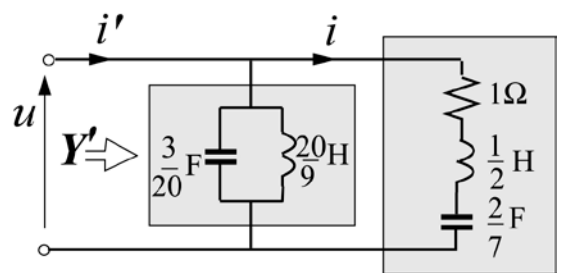

$Q = 8$ kVAr

$S = 12.7$ kVA

$\lambda = 0.78$

These loads cannot be distinguished with respect to Fryze's powers.
They differ as to the possibility of their compensation

Fryze's Power Theory
does not enable us to draw conclusions
as to the possibility of the load compensation with a reactive compensator

Opinion:

Fryze's theory provides fundamentals for switching compensator control

$$i = i_a + i_{rF}$$

i_a - active current is useful component
i_{rF} - reactive current is useless component

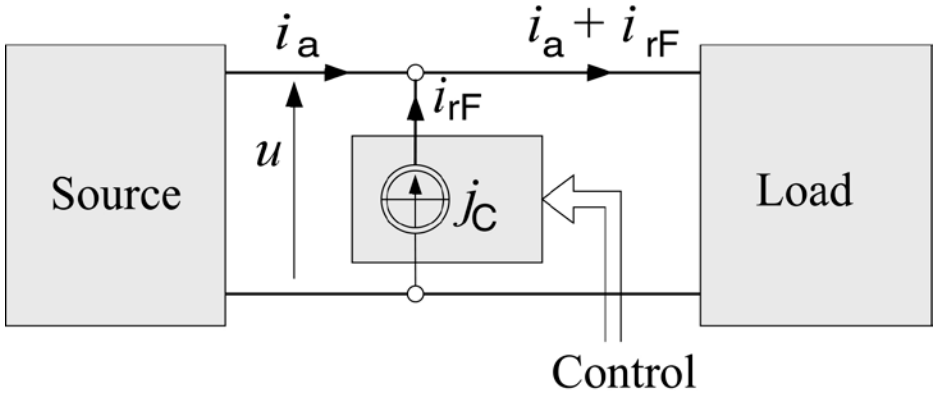

Illustration:

$e = 100\sqrt{2}\,\sin\omega_1 t$ V

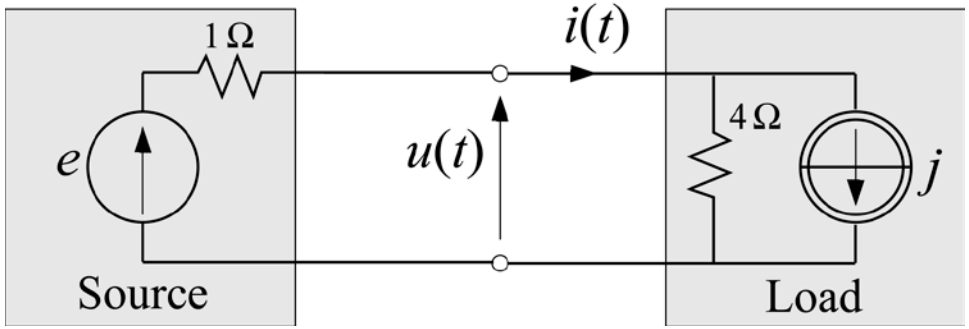

$j = 50\sqrt{2}\,\sin 3\omega_1 t$ A

$$i = \sqrt{2}(20\sin\omega_1 t + 40\sin 3\omega_1 t)\ \text{A}$$

$$u = \sqrt{2}(80\sin\omega_1 t - 40\sin 3\omega_1 t)\ \text{V}$$

$$P = 1600 - 1600 = 0$$

$$i_{\mathrm{a}}(t) = \frac{P}{\|u\|^2}u(t) = 0$$

According to Fryze's Power Theory,
total compensation requires that the current i_{rF} is reduced to zero

This is a wrong conclusion

Only the 3rd order current harmonic should be compensated

Critical Comments on
Shepherd and Zakikhani Power Theory

1971

Shepherd & Zakikhani, England, developed power theory in the frequency-domain:

$$u = U_0 + \sqrt{2}\sum_{n=1}^{\infty} U_n \cos(n\omega_1 t + \alpha_n) \qquad i = I_0 + \sqrt{2}\sum_{n=1}^{\infty} I_n \cos(n\omega_1 t + \alpha_n - \varphi_n),$$

$$i = I_0 + \sqrt{2}\sum_{n=1}^{\infty} I_n \cos\varphi_n \cos(n\omega_1 t + \alpha_n) + \sqrt{2}\sum_{n=1}^{\infty} I_n \sin\varphi_n \sin(n\omega_1 t + \alpha_n) = i_R + i_r$$

$$\| i \|^2 = \| i_R \|^2 + \| i_{rS} \|^2,$$

$$\| i_R \| = \sqrt{\sum_{n=0}^{\infty} I_n^2 \cos^2\varphi_n} \quad , \quad \| i_{rS} \| = \sqrt{\sum_{n=1}^{\infty} I_n^2 \sin^2\varphi_n}$$

$$S^2 = S_R^2 + Q_S^2$$

S&H power theory has provided the first solution of the compensation problem:

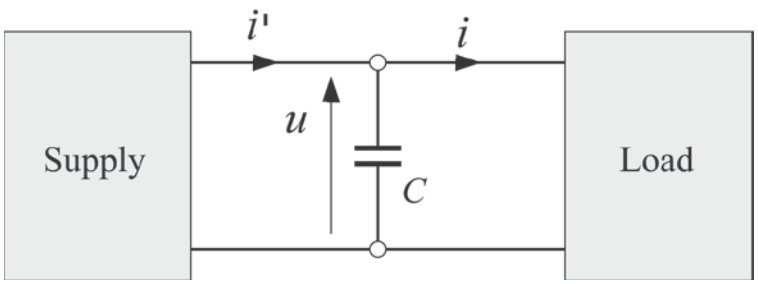

$$C = C_{opt} = \frac{\sum_{n=1}^{\infty} n U_n I_n \sin\varphi_n}{\omega_1 \sum_{n=1}^{\infty} n^2 U_n^2} = \frac{\sum_{n=1}^{\infty} n Q_n}{\omega_1 \sum_{n=1}^{\infty} n^2 U_n^2}$$

$$E_5 = 3.0\ \%\, E_1, \quad E_7 = 1.5\ \%\, E_1, \quad E_{11} = 0.5\ \%\, E_1$$

$$S_{sc} = 28.6 \times P$$

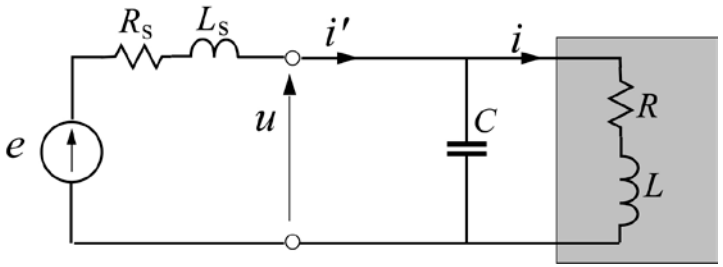

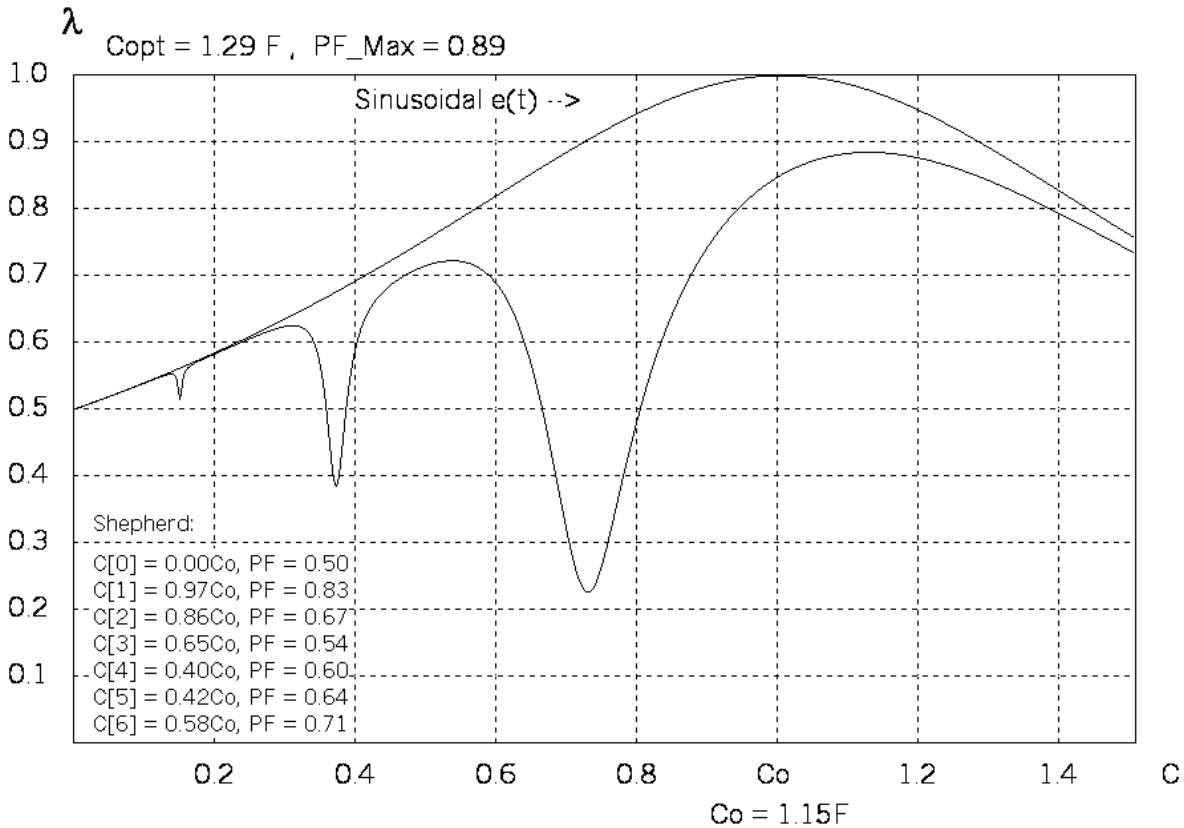

In situations common in distribution systems, the S&Z power theory does not provide optimal capacitance of a compensator.

Critical Comments on the Kusters and Moore Power Theory

L.S. Czarnecki, "Additional discussion to "Reactive power under nonsinusoidal conditions," *IEEE Trans. on Power and Systems,* Vol. PAS-102, No. 4, pp. 1023-1024, April 1983.

L.S. Czarnecki, "Comments on reactive powers as defined by Kusters and Moore for nonsinusoidal systems," *Rozprawy Elektrotechniczne,* Tom XXX, Z. 3-4,

1975

Kusters & Moore (National Research Council of Canada) developed power theory in time-domain:

$$i = i_{\mathrm{a}} + i_{\mathrm{rC}} + i_{\mathrm{rCr}}$$

$$\dot{u}(t) = \frac{d}{dt} u(t)$$

$$i_{\mathrm{rC}}(t) = \frac{(\dot{u}, i)}{\|\dot{u}\|^2} \dot{u}(t), \qquad i_{\mathrm{rCr}} = i - (i_{\mathrm{a}} + i_{\mathrm{rC}})$$

$$\| i \|^2 = \| i_{\mathrm{a}} \|^2 + \| i_{\mathrm{rC}} \|^2 + \| i_{\mathrm{rCs}} \|^2$$

$$S^2 = P^2 + Q_{\mathrm{K}}^2 + Q_{\mathrm{r}}^2 \qquad Q_{\mathrm{K}} = \|u\| \|i_{\mathrm{rC}}\|$$

According to K&M power theory, the optimal capacitance can be calculated in the time-domain:

$$C_{\mathrm{opt}} = -\frac{(\dot{u}, i)}{\|\dot{u}\|^2},$$

In 1980
K&M power theory was recommended
by International Electrotechnical Commission (IEC)

Critical Comments on the Instantaneous Reactive Power (IRP) p-q Power Theory

L.S. Czarnecki, “On some misinterpretations of the Instantaneous Reactive Power p-q Theory,” IEEE Trans. on Power Electronics, Vol. 19, No.3, 2004**.**

L.S. Czarnecki, "Comparison of the Instantaneous Reactive Power, p-q, Theory with Theory of Current’s Physical Components," *Archiv fur Elektrotechnik*, Vol. 85, No. 1, Feb. 2004.

L.S. Czarnecki, “Effect of supply voltage harmonics on IRP-based switching compensator control,” *IEEE Trans. on Power Electronics*, Vol. 24, No. 2, Feb. 2009.

L.S. Czarnecki, “Effect of supply voltage asymmetry on IRP p-q - based switching compensator control,“ *IET Proc. on Power Electronics*, 2010, Vol. 3, No. 1.

L.S. Czarnecki, “Constraints of the Instantaneous Reactive Power p-q Theory”, IET Power Electronics, Vol. 7, No. 9, 2014.

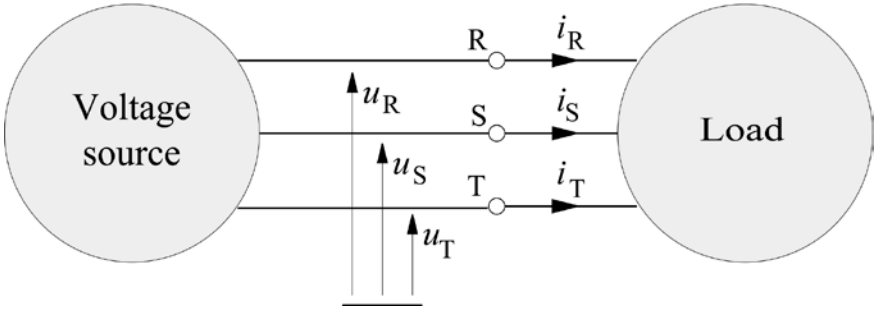

Clarke Transform:

$$\begin{bmatrix} u_\alpha \\ u_\beta \end{bmatrix} = \begin{bmatrix} \sqrt{3/2}, & 0 \\ 1/\sqrt{2}, & \sqrt{2} \end{bmatrix} \begin{bmatrix} u_R \\ u_S \end{bmatrix} = C \begin{bmatrix} u_R \\ u_S \end{bmatrix} \qquad \begin{bmatrix} i_\alpha \\ i_\beta \end{bmatrix} = \begin{bmatrix} \sqrt{3/2}, & 0 \\ 1/\sqrt{2}, & \sqrt{2} \end{bmatrix} \begin{bmatrix} i_R \\ i_S \end{bmatrix} = C \begin{bmatrix} i_R \\ i_S \end{bmatrix}$$

Instantaneous real or active power

$$p = u_\alpha i_\alpha + u_\beta i_\beta,$$

Instantaneous imaginary or reactive power

$$q = u_\alpha i_\beta - u_\beta i_\alpha$$

Instantaneous active current

In α, β coordinates:

$$i_{\alpha\mathrm{p}} = \frac{u_\alpha}{u_\alpha^2 + u_\beta^2} p \qquad i_{\beta\mathrm{p}} = \frac{u_\beta}{u_\alpha^2 + u_\beta^2} p$$

In phase coordinates:

$$\begin{bmatrix} i_{\mathrm{Rp}} \\ i_{\mathrm{Sp}} \end{bmatrix} = C^{-1} \begin{bmatrix} i_{\alpha\mathrm{p}} \\ i_{\beta\mathrm{p}} \end{bmatrix} = \begin{bmatrix} \sqrt{2/3}, & 0 \\ -1/\sqrt{6}, & 1/\sqrt{2} \end{bmatrix} \begin{bmatrix} i_{\alpha\mathrm{p}} \\ i_{\beta\mathrm{p}} \end{bmatrix}$$

Instantaneous reactive current

In α, β coordinates:

$$i_{\alpha\mathrm{q}} = \frac{-u_\beta}{u_\alpha^2 + u_\beta^2} q \qquad i_{\beta\mathrm{q}} = \frac{u_\alpha}{u_\alpha^2 + u_\beta^2} q$$

In phase coordinates:

$$\begin{bmatrix} i_{\mathrm{Rq}} \\ i_{\mathrm{Sq}} \end{bmatrix} = C^{-1} \begin{bmatrix} i_{\alpha\mathrm{q}} \\ i_{\beta\mathrm{q}} \end{bmatrix}$$

According to Nabae, who developed

the IRP p-q Theory:

"*It was developed to enable instantaneous compensation of the reactive power*"

Indeed,

powers *p* & *q*

can be specified instantaneously and this makes an impression that

power properties of a three-phase loads

can be identified instantaneously

Numerical illustration 1

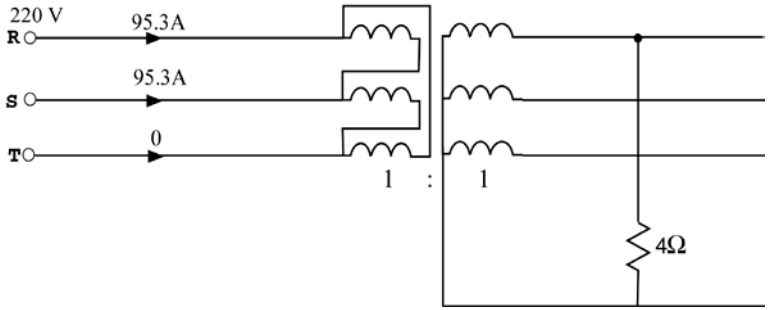

$$u_R = \sqrt{2}\,U\cos\omega t, \quad U = 220 \text{ V}$$

$$i_R = \sqrt{2}\,I\cos(\omega t + 30^0), \quad I = 95.3 \text{ A}$$

$Q = 0$

$$\begin{bmatrix} u_\alpha \\ u_\beta \end{bmatrix} = C \begin{bmatrix} u_R \\ u_S \end{bmatrix} = \begin{bmatrix} \sqrt{3}\,U\cos\omega t \\ \sqrt{3}\,U\sin\omega t \end{bmatrix}$$

$$\begin{bmatrix} i_\alpha \\ i_\beta \end{bmatrix} = C \begin{bmatrix} i_R \\ -i_R \end{bmatrix} = \begin{bmatrix} \sqrt{3}\,I\cos(\omega t + 30^o) \\ -I\cos(\omega t + 30^o) \end{bmatrix}$$

Instantaneous powers,

Active: $$p = u_\alpha i_\alpha + u_\beta i_\beta = \sqrt{3}\,U\,I\,[1 + \cos 2(\omega t + 30^0)]$$

Reactive: $$q = u_\alpha i_\beta - u_\beta i_\alpha = -\sqrt{3}\,U\,I\sin 2(\omega t + 30^0)$$

For $2(\omega t + 30^0) = 90^0$, $p = -q$

Instantaneous currents,

Active: $$\begin{bmatrix} i_{Rp} \\ i_{Sp} \end{bmatrix} = \sqrt{\frac{2}{3}}\,I\,[1 + \cos 2(\omega t + 30^0)] \begin{bmatrix} \cos\omega t \\ \cos(\omega t - 120^0) \end{bmatrix}$$

Reactive: $$\begin{bmatrix} i_{Rq} \\ i_{Sq} \end{bmatrix} = \sqrt{\frac{2}{3}}\,I\,\sin 2(\omega t + 30^0) \begin{bmatrix} \sin\omega t \\ \sin(\omega t - 120^0) \end{bmatrix}$$

Numerical illustration 2

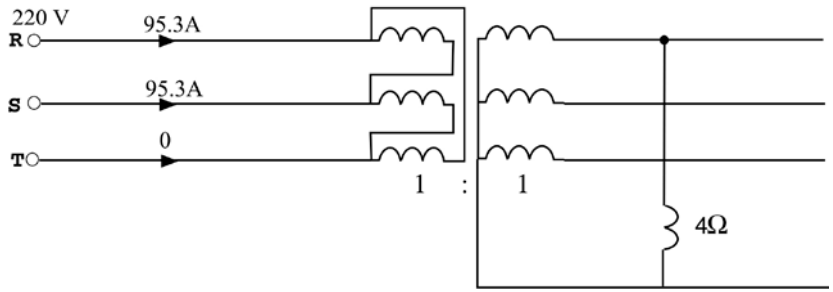

$$u_R = \sqrt{2}\,U\cos\omega t, \quad U = 220 \text{ V}$$

$$i_R = \sqrt{2}\,I\cos(\omega t - 60^0), \quad I = 95.3 \text{ A}$$

$P = 0$

$$\begin{bmatrix} i_\alpha \\ i_\beta \end{bmatrix} = C\begin{bmatrix} i_R \\ -i_R \end{bmatrix} = \begin{bmatrix} \sqrt{3}\,I\cos(\omega t - 60^o) \\ -I\cos(\omega t - 60^o) \end{bmatrix}$$

Instantaneous powers,

Active: $p = u_\alpha i_\alpha + u_\beta i_\beta = \sqrt{3}\,U\,I\,[\cos(2\omega t - 30^0)]$

Reactive: $q = u_\alpha i_\beta - u_\beta i_\alpha = -\sqrt{3}\,U\,I\,[1 + \sin(2\omega t - 30^0)]$

For $2\omega t - 30^0 = 0, \quad p = -q$

Instantaneous active current in R line:

$$i_{Rp} = \frac{I}{\sqrt{6}}[\cos(\omega t - 30^0) + \cos(3\omega t - 30^0)]$$

Numerical illustration 3

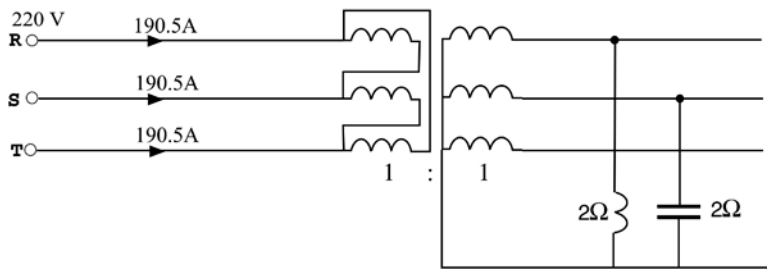

$$u_R = \sqrt{2}\,U\cos\omega t, \quad U = 220 \text{ V}$$

$$i_R = \sqrt{2}\,I\cos(\omega t - 60^0), \quad I = 190.5 \text{ A}$$

$$i_S = \sqrt{2}\,I\cos(\omega t + 60^0)$$

$$P = 0, \quad Q = 0$$

$$\begin{bmatrix} i_\alpha \\ i_\beta \end{bmatrix} = C \begin{bmatrix} i_R \\ i_S \end{bmatrix} = \begin{bmatrix} \sqrt{3}\,I\cos(\omega t - 60^o) \\ -\sqrt{3}\,I\sin(\omega t - 60^o) \end{bmatrix}$$

Instantaneous powers,

Active: $p = u_\alpha i_\alpha + u_\beta i_\beta = 3UI\cos(2\omega t - 60^0)$

Reactive: $q = u_\alpha i_\beta - u_\beta i_\alpha = -3UI\sin(2\omega t - 60^0)$

For $2\omega t - 60^0 = 45^0$, $p = -q$

Instantaneous currents,

Active:

$$i_{\alpha p} = \frac{\sqrt{3}}{2} I\,[\cos(\omega t - 60^0) + \cos(3\omega t - 60^0)]$$

$$i_{\beta p} = \frac{\sqrt{3}}{2} I\,[-\sin(\omega t - 60^0) + \sin(3\omega t - 60^0)]$$

Reactive:

$$i_{\alpha q} = \frac{\sqrt{3}}{2} I\,[\cos(\omega t - 60^0) - \cos(3\omega t - 60^0)]$$

$$i_{\beta q} = \frac{\sqrt{3}}{2} I\,[\sin(\omega t - 60^0) + \sin(3\omega t - 60^0)]$$

Conclusion

A pair of powers *p* and *q,* specified in a distinct instant of time

does not specify
power properties of three-phase loads

All measures that determine power system performance, such us:

- rms values of voltages and currents,
- active power P
- reactive power Q
- apparent power S
- power factor $\lambda = P/S$
- level of harmonic distortion
- level of the voltage and current asymmetry

are functionals
calculated over the whole period T

Instantaneous power theories such as, for example,
the Instantaneous Reactive Power p-q Theory,
do not provide such measures.

Critical Comments on the Conservative Power Theory (CPT)

L.S. Czarnecki: Critical comments on the Conservative Power Theory (CPT), *Przegląd elektrotechniczny (Proc. of Electrical Engineering)*, R3, No. 1, pp. 268-274, 2017.

L.S.Czarnecki: What is Wrong with the Conservative Power Theory (CPT), Int. Conference on Applied and Theoretical Electrical Eng. (ICATE) Romania, 2016

Tenti (2003), Universiti di Padowa, Italy, developed power theory in time-domain, and named it Conservative Power Theory (CPT)

CPT basic current decomposition

$$i(t) = i_{\mathrm{a}}(t) + i_{\mathrm{rT}}(t) + i_{\mathrm{v}}(t)$$

Reactive current in the Conservative Power Theory (CPT)

$$i_{\mathrm{rT}}(t) \overset{\mathrm{df}}{=} \frac{W}{\|\hat{u}\|^2}\hat{u}(t)$$

$\hat{u}(t)$ denotes the unbiased voltage integral

$$W \overset{\mathrm{df}}{=} (\hat{u}, i) \overset{\mathrm{df}}{=} \frac{1}{T}\int_0^T \hat{u}(t)\, i(t)\, dt$$

Reactive energy

Void current is defined as $i_{\mathrm{v}}(t) = i(t) - i_{\mathrm{a}}(t) - i_{\mathrm{rT}}(t)$

This current is defined based on a concept of “reactive energy” W

$$W \overset{\text{df}}{=} (\hat{u}, i) \overset{\text{df}}{=} \frac{1}{T}\int_0^T \hat{u}(t)\, i(t)\, dt$$

Quantity W of capacitors is negative, thus it is not energy

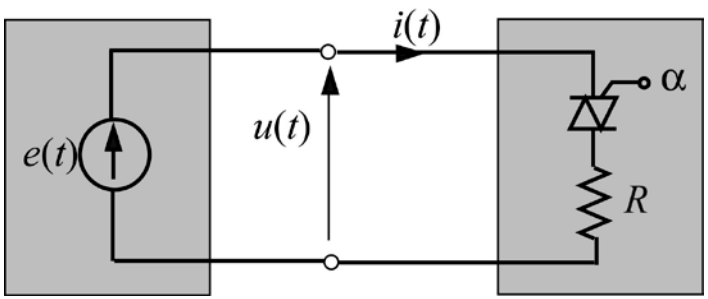

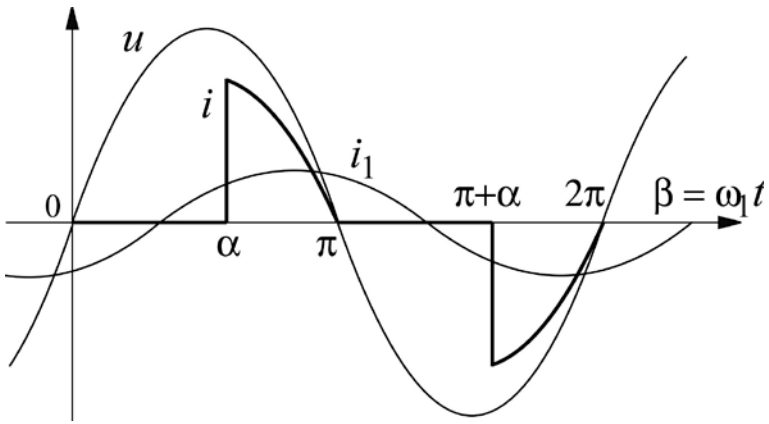

$$W = \langle \hat{u}, i \rangle = \sum_{n=1}^{\infty} \langle \hat{u}_n, i_n \rangle = \langle \hat{u}, i_1 \rangle = \frac{1}{T}\int_0^T \hat{u}(t)\, i_1(t)\, dt = \frac{UI_1}{\omega_1}\sin\varphi_1 .$$

It can have non-zero value in a purely resistive load

The currents in the CPT are defined in time-domain
and their physical meaning
is not specified

For purely reactive loads, the void current calculated in the frequency-domain is

$$i_{\mathrm{v}}(t) = i(t) - i_{\mathrm{rT}}(t) = \sqrt{2}\,\mathrm{Re}\sum_{n\in N} j\,(B_n - \frac{1}{n\,\omega_1 L_{\mathrm{e}}})\boldsymbol{U}_n\, e^{jn\omega_1 t}$$

It is a quadrature current component i.e., kind of reactive current

Demonstration that capacitive compensation of the CPT reactive current $i_{qr}(t)$ increases the void current

$$\boldsymbol{U}_1 = \boldsymbol{U}_5 = 100e^{j0^\circ}\ \text{V},$$

$$\|u\| = 100\sqrt{2}\ \text{V}$$

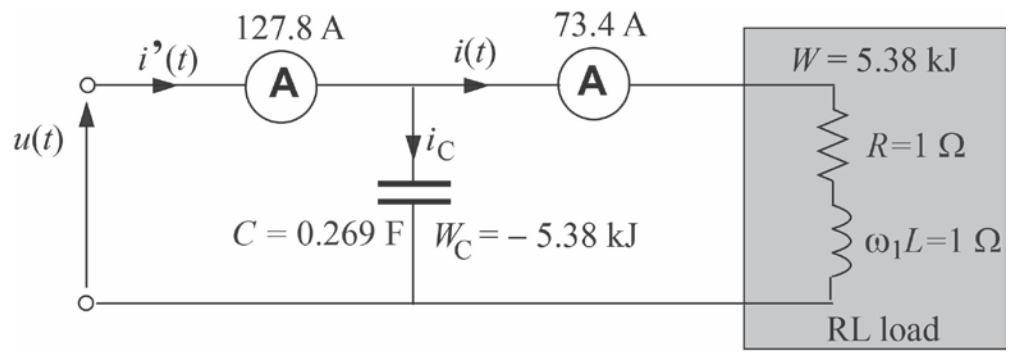

$$\boldsymbol{I}_1 = 70.7e^{-j45^\circ}\ \text{A}, \quad \boldsymbol{I}_5 = 19.9e^{-j79^\circ}\ \text{A}, \quad \|i\| = 73.4\ \text{A}$$

$$W = \text{Re}\sum_{n=1,5}\frac{\boldsymbol{U}_n}{jn\omega_1}(\boldsymbol{Y}_n\boldsymbol{U}_n)^* = 0.538\times10^4\ \text{J}.$$

$$C = \frac{W}{\|u\|^2} = 0.269\ \text{F}$$

$$\boldsymbol{I}'_1 = 55.1e^{-j24.8^\circ}\ \text{A}, \quad \boldsymbol{I}'_5 = 115.3e^{j88.0^\circ}\ \text{A}, \quad \|i'\| = 127.8\ \text{A}.$$

Short overview of results of various approaches to power theory development

Budeanu (1927) Power Theory:
(In the frequency-domain)

Endorsed by the IEEE Standard Dictionery of Electrical and Electronics Terms in 1992
and German Standards DIN in 1972

- Reactive and distortion powers *Q* and *D* are not associated with any power phenomena

- It does not provide fundamentals for compensation

L.S. Czarnecki, "What is wrong with the Budeanu concept of reactive and distortion powers and why it should be abandoned," *IEEE Trans. Instr. Meas.,* Vol. IM-36, No. 3, pp. 834-837, Sept. 1987.

L.S. Czarnecki, “Budeanu and Fryze: Two frameworks for interpreting power properties of circuits with nonsinusoidal voltages and currents,” *Archiv fur Elektrotechnik*, (81), N. 2, pp. 5-15, 1997.

Fryze (1931) Power Theory
(In the time-domain)

Endorsed by German Standards DIN in 1972

- It introduced the concept of the active current
- It introduced the concept of the current orthogonal decomposion
- It does not provide physical interpretation of power phenomena
- It does not provide fundamentals for reactive compensation

L.S. Czarnecki, "Budeanu and Fryze: Two frameworks for interpreting power properties of circuits with nonsinusoidal voltages and currents,"
Archiv fur Elektrotechnik, (81), N. 2, pp. 5-15, 1997.

Shepherd and Zakikhani (1972) Power Theory
(In the frequency-domain)

- It introduced the concept of the reactive current

- It solved the problem of optimal capacitive compensation at nonsinusoidal supply voltage

L.S. Czarnecki, "Comments on reactive powers as defined by Kusters and Moore for nonsinusoidal systems," *Rozprawy Elektrotechniczne,* Tom XXX, Z. 3-4, pp. 1089-1099, 1984.

Kusters and Moore (1980) power theory
(In the time-domain)

Endorsed by the International Electrotechnical Commission in 1980

- It solved the problem of optimal capacitive compensation at nonsinusoidal supply voltage in time-domain

L.S. Czarnecki, "Additional discussion to "Reactive power under nonsinusoidal conditions," *IEEE Trans. on Power and Systems,* Vol. PAS-102, No. 4, April 1983.

L.S. Czarnecki, "Comments on reactive powers as defined by Kusters and Moore for nonsinusoidal systems," *Rozprawy Elektrotechniczne,* Tom XXX, Z. 3-4, pp. 1089-1099, 1984.

Depenbrock (1993) the FBD Method
(In the time-domain)

- It generalizes Fryze's power theory to three-phase systems
- It correctly defines the apparent power *S*
- It does not provide interpretation of power phenomena
- It does not provide fundamentals for reactive compensation

Nabae and Akagi (1984): Instantaneous Reactive Power p-q Theory (in the time-domain)

- It solved the problem of compensation in three-phase of unbalanced, harmonics generating loads supplied with sinusoidal and symmetrical supply voltage
- It does not describe power properties of systems with nonsinusoidal supply voltage
- It misinterprates power phenomena in three-phase systems

L.S. Czarnecki, "On some misinterpretations of the Instantaneous Reactive Power p-q Theory," IEEE Trans. on Power Electronics, Vol. 19, No.3, 2004**.**

L.S. Czarnecki, "Comparison of the Instantaneous Reactive Power, p-q, Theory with Theory of Current's Physical Components," *Archiv fur Elektrotechnik*, Vol. 85, No. 1, Feb. 2004.

L.S. Czarnecki, "Effect of supply voltage harmonics on IRP-based switching compensator control," *IEEE Trans. on Power Electronics*, Vol. 24, No. 2, Feb. 2009.

L.S. Czarnecki, "Effect of supply voltage asymmetry on IRP p-q - based switching compensator control," *IET Proc. on Power Electronics*, 2010, Vol. 3, No. 1.

L.S. Czarnecki, "Constraints of the Instantaneous Reactive Power p-q Theory", IET Power Electronics, Vol. 7, No. 9, 2014.

Tenti (2003): The Conservative Power Theory (CPT),
formulated by in the time-domain

- It misinterprates power phenomena

- It does not provide right fundamentals for compensation

L.S. Czarnecki: Critical comments on the Conservative Power Theory (CPT), *Przegląd Elektrotechniczny (Proc. of Electrical Engineering)*, R3, No. 1, pp. 268-274, 2017.

L.S.Czarnecki: What is Wrong with the Conservative Power Theory (CPT), Int. Conference on Applied and Theoretical Electrical Eng. (ICATE) Romania, 2016

Why the apparent power *S* is higher than the active power *P* ?

How the difference between *S* and *P* can be reduced ?

To keep a healthy distance to what I told,
a power system engineer
after such a presentation told:

„It does not matter that
the apparent power S is higher than the active power P.
Eventually
customers pay for everything”

Thanks for your attantion!!

با تشکر از توجه شما